Nametable Mapping

File: nametable_mapping.kicad_sch

CPU Address Bus

File: cpuAddressBus.kicad_sch

Register Access

File: register_access.kicad_sch

PRG Banking

File: prg_banking.kicad_sch

PPU Address Bus

File: ppu_address_bus.kicad_sch

Reset Detection

File: reset_detection.kicad_sch

CPU Data Bus

File: cpu_data_bus.kicad_sch

PCM DAC

File: pcm_dac.kicad_sch

Scanline Detection

File: scanline_detection.kicad_sch

V-Split

File: v_split.kicad_sch

PPU Fetch Counting

File: ppu_fetch_counting.kicad_sch

CHR A0,A1,A2

File: chr_a0_a1_a2.kicad_sch

ExRAM Mode

File: exram_mode.kicad_sch

Fill Mode

File: fill_mode.kicad_sch

Pulse Length Lookup Table

File: pulse_length_lookup_table.kicad_sch

Pulse Timer

File: pulse_timer.kicad_sch

Pulse Duty Envelope Volume

File: pulse_duty_envelope_volume.kicad_sch

Pulse DAC

File: Pulse DAC.kicad_sch

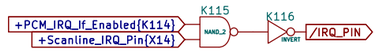

CPU Address Bus Buffering

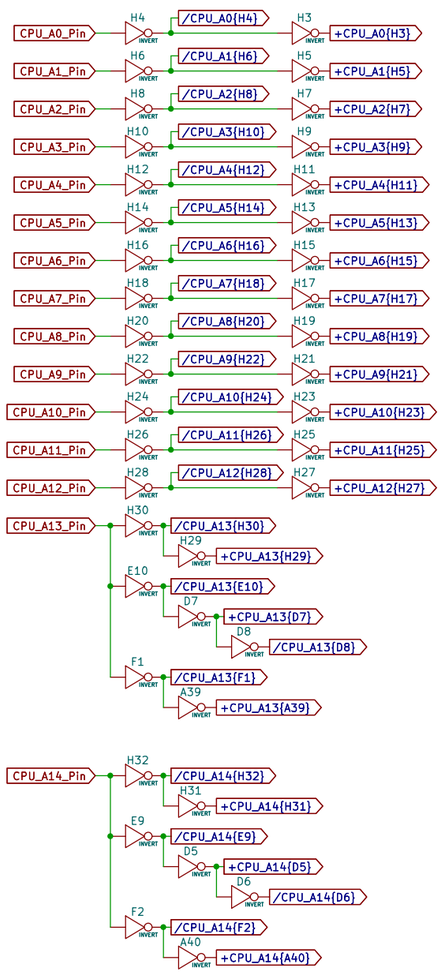

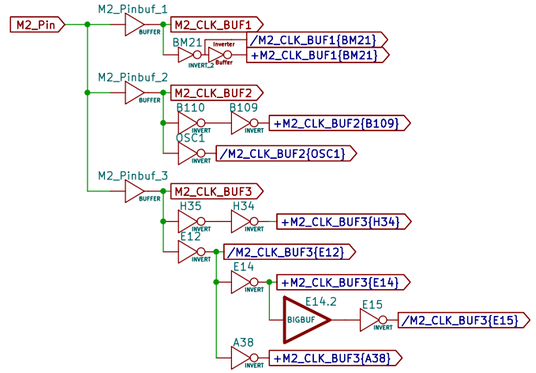

CPU Address Bus Nybble Decoding

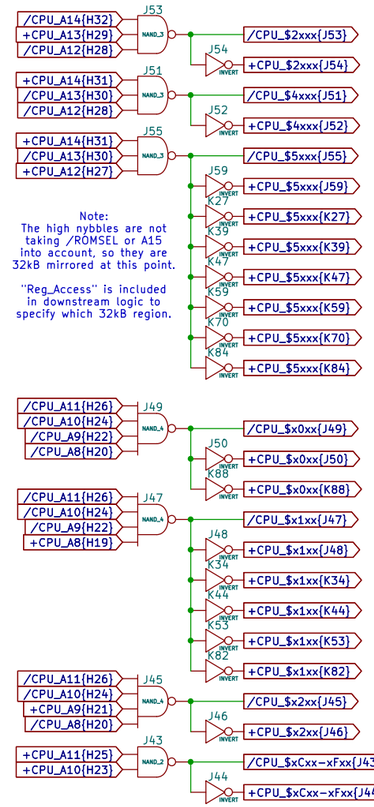

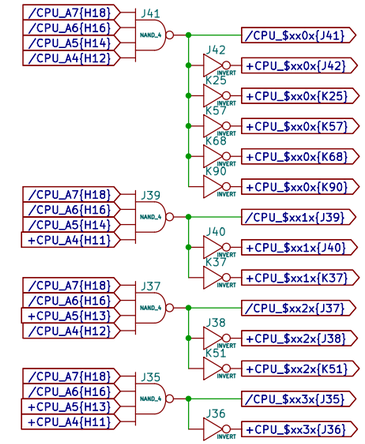

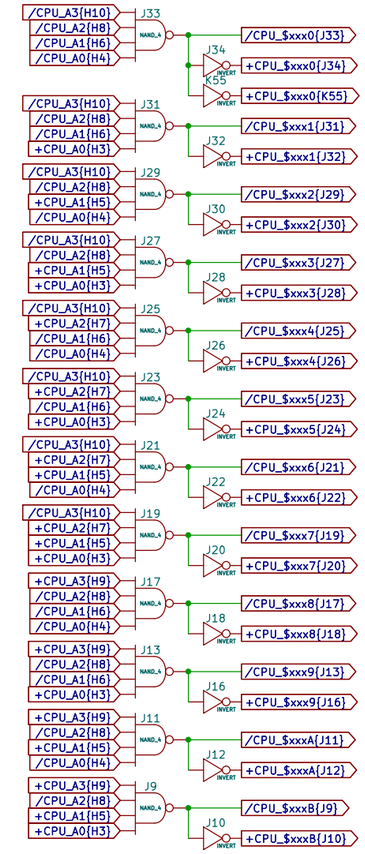

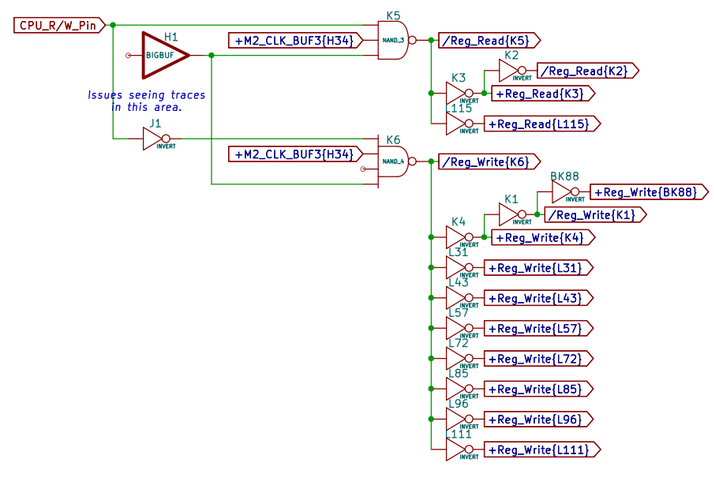

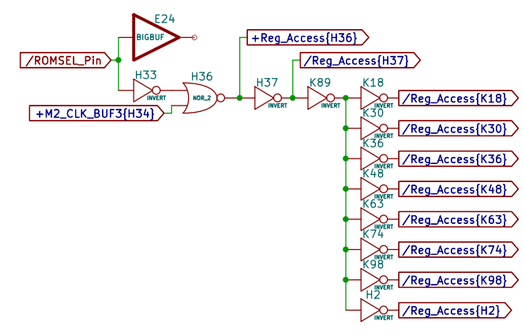

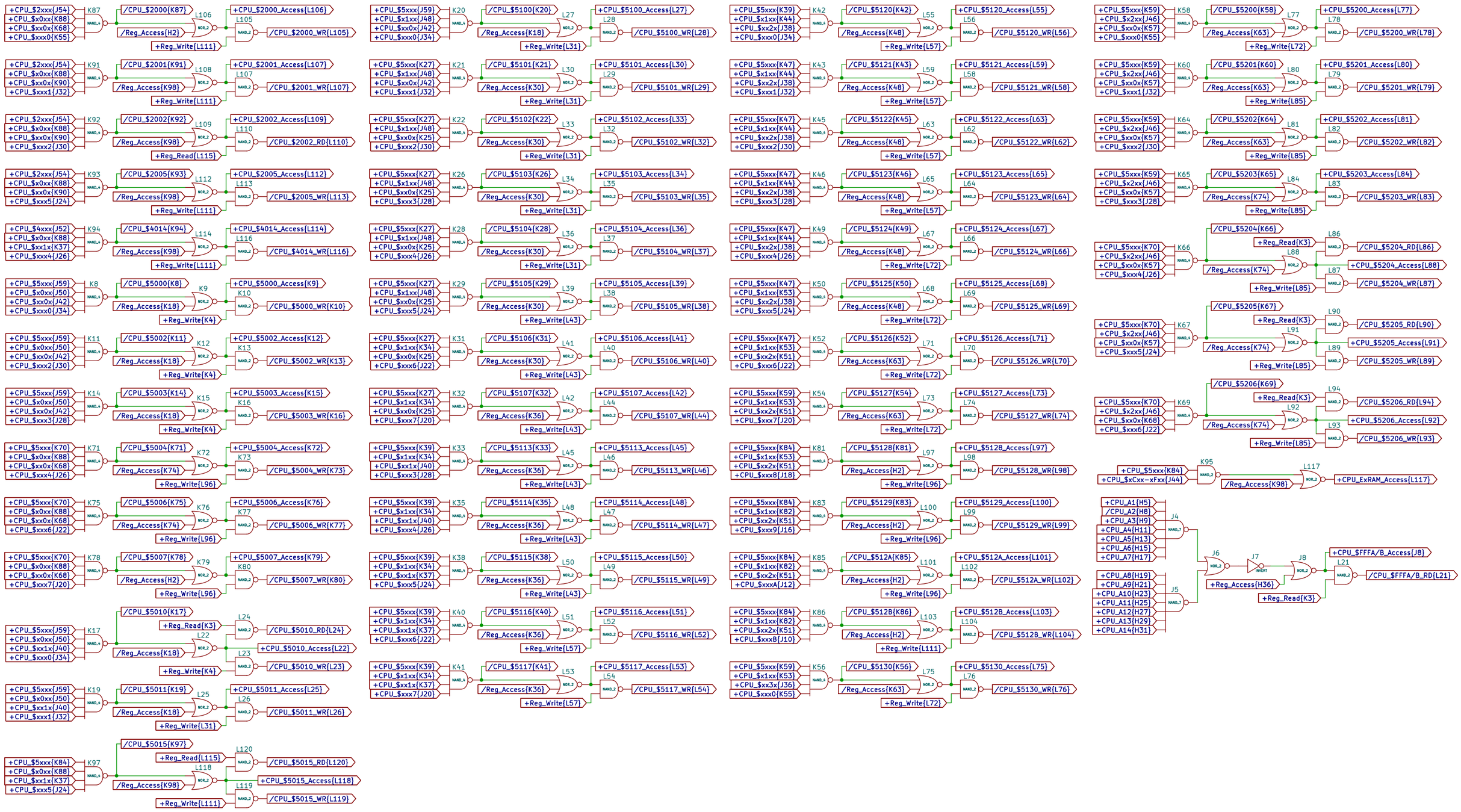
K87 NAND_4 +CPU_$2xxx{J54} +CPU_$x0xx{K88} +CPU_$xx0x{K68} +CPU_$xxx0{K55} /CPU_$2000{K87}
L106 NOR_2 /Reg_Access{H2} +Reg_Write{L111}
L105 NAND_2 +CPU_$2000_Access{L106} /CPU_$2000_WR{L105}
K91 NAND_4 +CPU_$2xxx{J54} +CPU_$x0xx{K88} +CPU_$xx0x{K90} +CPU_$xxx1{J32} /CPU_$2001{K91}
L108 NOR_2 /Reg_Access{K98} +Reg_Write{L111}
L107 NAND_2 +CPU_$2001_Access{L107} /CPU_$2001_WR{L107}
K92 NAND_4 +CPU_$2xxx{J54} +CPU_$x0xx{K88} +CPU_$xx0x{K90} +CPU_$xxx2{J30} /CPU_$2002{K92}
L109 NOR_2 /Reg_Access{K98} +Reg_Read{L115}
L110 NAND_2 +CPU_$2002_Access{L109} /CPU_$2002_RD{L110}
K93 NAND_4 +CPU_$2xxx{J54} +CPU_$x0xx{K88} +CPU_$xx0x{K90} +CPU_$xxx5{J24} /CPU_$2005{K93}
L112 NOR_2 /Reg_Access{K98} +Reg_Write{L111}
L113 NAND_2 +CPU_$2005_Access{L112} /CPU_$2005_WR{L113}
K94 NAND_4 +CPU_$4xxx{J52} +CPU_$x0xx{K88} +CPU_$xx1x{K37} +CPU_$xxx4{J26} /CPU_$4014{K94}
L114 NOR_2 /Reg_Access{K98} +Reg_Write{L111}
L116 NAND_2 +CPU_$4014_Access{L114} /CPU_$4014_WR{L116}
K8 NAND_4 +CPU_$5xxx{J59} +CPU_$x0xx{J50} +CPU_$xx0x{J42} +CPU_$xxx0{J34} /CPU_$5000{K8}
K9 NOR_2 /Reg_Access{K18} +Reg_Write{K4}
K10 NAND_2 +CPU_$5000_Access{K9} /CPU_$5000_WR{K10}
K11 NAND_4 +CPU_$5xxx{J59} +CPU_$x0xx{J50} +CPU_$xx0x{J42} +CPU_$xxx2{J30} /CPU_$5002{K11}
K12 NOR_2 /Reg_Access{K18} +Reg_Write{K4}
K13 NAND_2 +CPU_$5002_Access{K12} /CPU_$5002_WR{K13}
K14 NAND_4 +CPU_$5xxx{J59} +CPU_$x0xx{J50} +CPU_$xx0x{J42} +CPU_$xxx3{J28} /CPU_$5003{K14}
K15 NOR_2 /Reg_Access{K18} +Reg_Write{K4}
K16 NAND_2 +CPU_$5003_Access{K15} /CPU_$5003_WR{K16}
K71 NAND_4 +CPU_$5xxx{K70} +CPU_$x0xx{K88} +CPU_$xx0x{K68} +CPU_$xxx4{J26} /CPU_$5004{K71}
K72 NOR_2 /Reg_Access{K74} +Reg_Write{L96}
K73 NAND_2 +CPU_$5004_Access{K72} /CPU_$5004_WR{K73}
K75 NAND_4 +CPU_$5xxx{K70} +CPU_$x0xx{K88} +CPU_$xx0x{K68} +CPU_$xxx6{J22} /CPU_$5006{K75}
K76 NOR_2 /Reg_Access{K74} +Reg_Write{L96}
K77 NAND_2 +CPU_$5006_Access{K76} /CPU_$5006_WR{K77}
K78 NAND_4 +CPU_$5xxx{K70} +CPU_$x0xx{K88} +CPU_$xx0x{K68} +CPU_$xxx7{J20} /CPU_$5007{K78}
K79 NOR_2 /Reg_Access{H2} +Reg_Write{L96}
K80 NAND_2 +CPU_$5007_Access{K79} /CPU_$5007_WR{K80}
K17 NAND_4 +CPU_$5xxx{J59} +CPU_$x0xx{J50} +CPU_$xx1x{J40} +CPU_$xxx0{J34} /CPU_$5010{K17}
L22 NOR_2 /Reg_Access{K18} +Reg_Read{K3} +Reg_Write{K4}
L24 NAND_2 /CPU_$5010_RD{L24}
L23 NAND_2 +CPU_$5010_Access{L22} /CPU_$5010_WR{L23}
K19 NAND_4 +CPU_$5xxx{J59} +CPU_$x0xx{J50} +CPU_$xx1x{J40} +CPU_$xxx1{J32} /CPU_$5011{K19}
L25 NOR_2 /Reg_Access{K18} +Reg_Write{L31}
L26 NAND_2 +CPU_$5011_Access{L25} /CPU_$5011_WR{L26}
K97 NAND_4 +CPU_$5xxx{K84} +CPU_$x0xx{K88} +CPU_$xx1x{K37} +CPU_$xxx5{J24} /CPU_$5015{K97}
L118 NOR_2 /Reg_Access{K98} +Reg_Read{L115} +Reg_Write{L111}
L120 NAND_2 /CPU_$5015_RD{L120}
L119 NAND_2 +CPU_$5015_Access{L118} /CPU_$5015_WR{L119}
K20 NAND_4 +CPU_$5xxx{J59} +CPU_$x1xx{J48} +CPU_$xx0x{J42} +CPU_$xxx0{J34} /CPU_$5100{K20}
L27 NOR_2 /Reg_Access{K18} +Reg_Write{L31}
L28 NAND_2 +CPU_$5100_Access{L27} /CPU_$5100_WR{L28}
K21 NAND_4 +CPU_$5xxx{K27} +CPU_$x1xx{J48} +CPU_$xx0x{J42} +CPU_$xxx1{J32} /CPU_$5101{K21}
L30 NOR_2 /Reg_Access{K30} +Reg_Write{L31}
L29 NAND_2 +CPU_$5101_Access{L30} /CPU_$5101_WR{L29}
K22 NAND_4 +CPU_$5xxx{K27} +CPU_$x1xx{J48} +CPU_$xx0x{K25} +CPU_$xxx2{J30} /CPU_$5102{K22}
L33 NOR_2 /Reg_Access{K30} +Reg_Write{L31}
L32 NAND_2 +CPU_$5102_Access{L33} /CPU_$5102_WR{L32}
K26 NAND_4 +CPU_$5xxx{K27} +CPU_$x1xx{J48} +CPU_$xx0x{K25} +CPU_$xxx3{J28} /CPU_$5103{K26}
L34 NOR_2 /Reg_Access{K30} +Reg_Write{L31}
L35 NAND_2 +CPU_$5103_Access{L34} /CPU_$5103_WR{L35}
K28 NAND_4 +CPU_$5xxx{K27} +CPU_$x1xx{J48} +CPU_$xx0x{K25} +CPU_$xxx4{J26} /CPU_$5104{K28}
L36 NOR_2 /Reg_Access{K30} +Reg_Write{L31}
L37 NAND_2 +CPU_$5104_Access{L36} /CPU_$5104_WR{L37}
K29 NAND_4 +CPU_$5xxx{K27} +CPU_$x1xx{J48} +CPU_$xx0x{K25} +CPU_$xxx5{J24} /CPU_$5105{K29}
L39 NOR_2 /Reg_Access{K30} +Reg_Write{L43}
L38 NAND_2 +CPU_$5105_Access{L39} /CPU_$5105_WR{L38}
K31 NAND_4 +CPU_$5xxx{K27} +CPU_$x1xx{K34} +CPU_$xx0x{K25} +CPU_$xxx6{J22} /CPU_$5106{K31}
L41 NOR_2 /Reg_Access{K30} +Reg_Write{L43}
L40 NAND_2 +CPU_$5106_Access{L41} /CPU_$5106_WR{L40}
K32 NAND_4 +CPU_$5xxx{K27} +CPU_$x1xx{K34} +CPU_$xx0x{K25} +CPU_$xxx7{J20} /CPU_$5107{K32}
L42 NOR_2 /Reg_Access{K36} +Reg_Write{L43}
L44 NAND_2 +CPU_$5107_Access{L42} /CPU_$5107_WR{L44}
K33 NAND_4 +CPU_$5xxx{K39} +CPU_$x1xx{K34} +CPU_$xx1x{J40} +CPU_$xxx3{J28} /CPU_$5113{K33}
L45 NOR_2 /Reg_Access{K36} +Reg_Write{L43}
L46 NAND_2 +CPU_$5113_Access{L45} /CPU_$5113_WR{L46}
K35 NAND_4 +CPU_$5xxx{K39} +CPU_$x1xx{K34} +CPU_$xx1x{J40} +CPU_$xxx4{J26} /CPU_$5114{K35}
L48 NOR_2 /Reg_Access{K36} +Reg_Write{L43}
L47 NAND_2 +CPU_$5114_Access{L48} /CPU_$5114_WR{L47}
K38 NAND_4 +CPU_$5xxx{K39} +CPU_$x1xx{K34} +CPU_$xx1x{K37} +CPU_$xxx5{J24} /CPU_$5115{K38}
L50 NOR_2 /Reg_Access{K36} +Reg_Write{L43}
L49 NAND_2 +CPU_$5115_Access{L50} /CPU_$5115_WR{L49}
K40 NAND_4 +CPU_$5xxx{K39} +CPU_$x1xx{K34} +CPU_$xx1x{K37} +CPU_$xxx6{J22} /CPU_$5116{K40}
L51 NOR_2 /Reg_Access{K36} +Reg_Write{L57}
L52 NAND_2 +CPU_$5116_Access{L51} /CPU_$5116_WR{L52}
K41 NAND_4 +CPU_$5xxx{K39} +CPU_$x1xx{K34} +CPU_$xx1x{K37} +CPU_$xxx7{J20} /CPU_$5117{K41}
L53 NOR_2 /Reg_Access{K36} +Reg_Write{L57}
L54 NAND_2 +CPU_$5117_Access{L53} /CPU_$5117_WR{L54}
K42 NAND_4 +CPU_$5xxx{K39} +CPU_$x1xx{K44} +CPU_$xx2x{J38} +CPU_$xxx0{J34} /CPU_$5120{K42}
L55 NOR_2 /Reg_Access{K48} +Reg_Write{L57}
L56 NAND_2 +CPU_$5120_Access{L55} /CPU_$5120_WR{L56}
K43 NAND_4 +CPU_$5xxx{K47} +CPU_$x1xx{K44} +CPU_$xx2x{J38} +CPU_$xxx1{J32} /CPU_$5121{K43}
L59 NOR_2 /Reg_Access{K48} +Reg_Write{L57}
L58 NAND_2 +CPU_$5121_Access{L59} /CPU_$5121_WR{L58}
K45 NAND_4 +CPU_$5xxx{K47} +CPU_$x1xx{K44} +CPU_$xx2x{J38} +CPU_$xxx2{J30} /CPU_$5122{K45}
L63 NOR_2 /Reg_Access{K48} +Reg_Write{L57}
L62 NAND_2 +CPU_$5122_Access{L63} /CPU_$5122_WR{L62}
K46 NAND_4 +CPU_$5xxx{K47} +CPU_$x1xx{K44} +CPU_$xx2x{J38} +CPU_$xxx3{J28} /CPU_$5123{K46}
L65 NOR_2 /Reg_Access{K48} +Reg_Write{L57}
L64 NAND_2 +CPU_$5123_Access{L65} /CPU_$5123_WR{L64}
K49 NAND_4 +CPU_$5xxx{K47} +CPU_$x1xx{K44} +CPU_$xx2x{J38} +CPU_$xxx4{J26} /CPU_$5124{K49}
L67 NOR_2 /Reg_Access{K48} +Reg_Write{L72}
L66 NAND_2 +CPU_$5124_Access{L67} /CPU_$5124_WR{L66}
K50 NAND_4 +CPU_$5xxx{K47} +CPU_$x1xx{K53} +CPU_$xx2x{J38} +CPU_$xxx5{J24} /CPU_$5125{K50}
L68 NOR_2 /Reg_Access{K48} +Reg_Write{L72}
L69 NAND_2 +CPU_$5125_Access{L68} /CPU_$5125_WR{L69}
K52 NAND_4 +CPU_$5xxx{K47} +CPU_$x1xx{K53} +CPU_$xx2x{K51} +CPU_$xxx6{J22} /CPU_$5126{K52}
L71 NOR_2 /Reg_Access{K63} +Reg_Write{L72}
L70 NAND_2 +CPU_$5126_Access{L71} /CPU_$5126_WR{L70}
K54 NAND_4 +CPU_$5xxx{K59} +CPU_$x1xx{K53} +CPU_$xx2x{K51} +CPU_$xxx7{J20} /CPU_$5127{K54}
L73 NOR_2 /Reg_Access{K63} +Reg_Write{L72}
L74 NAND_2 +CPU_$5127_Access{L73} /CPU_$5127_WR{L74}
K81 NAND_4 +CPU_$5xxx{K84} +CPU_$x1xx{K53} +CPU_$xx2x{K51} +CPU_$xxx8{J18} /CPU_$5128{K81}
L97 NOR_2 /Reg_Access{H2} +Reg_Write{L96}
L98 NAND_2 +CPU_$5128_Access{L97} /CPU_$5128_WR{L98}
K83 NAND_4 +CPU_$5xxx{K84} +CPU_$x1xx{K82} +CPU_$xx2x{K51} +CPU_$xxx9{J16} /CPU_$5129{K83}
L100 NOR_2 /Reg_Access{H2} +Reg_Write{L96}
L99 NAND_2 +CPU_$5129_Access{L100} /CPU_$5129_WR{L99}
K85 NAND_4 +CPU_$5xxx{K84} +CPU_$x1xx{K82} +CPU_$xx2x{K51} +CPU_$xxxA{J12} /CPU_$512A{K85}
L101 NOR_2 /Reg_Access{H2} +Reg_Write{L96}
L102 NAND_2 +CPU_$512A_Access{L101} /CPU_$512A_WR{L102}
K86 NAND_4 +CPU_$5xxx{K84} +CPU_$x1xx{K82} +CPU_$xx2x{K51} +CPU_$xxxB{J10} /CPU_$512B{K86}
L103 NOR_2 /Reg_Access{H2} +Reg_Write{L111}
L104 NAND_2 +CPU_$512B_Access{L103} /CPU_$512B_WR{L104}
K56 NAND_4 +CPU_$5xxx{K59} +CPU_$x1xx{K53} +CPU_$xx3x{J36} +CPU_$xxx0{K55} /CPU_$5130{K56}
L75 NOR_2 /Reg_Access{K63} +Reg_Write{L72}
L76 NAND_2 +CPU_$5130_Access{L75} /CPU_$5130_WR{L76}
K58 NAND_4 +CPU_$5xxx{K59} +CPU_$x2xx{J46} +CPU_$xx0x{K57} +CPU_$xxx0{K55} /CPU_$5200{K58}
L77 NOR_2 /Reg_Access{K63} +Reg_Write{L72}
L78 NAND_2 +CPU_$5200_Access{L77} /CPU_$5200_WR{L78}
K60 NAND_4 +CPU_$5xxx{K59} +CPU_$x2xx{J46} +CPU_$xx0x{K57} +CPU_$xxx1{J32} /CPU_$5201{K60}
L80 NOR_2 /Reg_Access{K63} +Reg_Write{L85}
L79 NAND_2 +CPU_$5201_Access{L80} /CPU_$5201_WR{L79}
K64 NAND_4 +CPU_$5xxx{K59} +CPU_$x2xx{J46} +CPU_$xx0x{K57} +CPU_$xxx2{J30} /CPU_$5202{K64}
L81 NOR_2 /Reg_Access{K63} +Reg_Write{L85}
L82 NAND_2 +CPU_$5202_Access{L81} /CPU_$5202_WR{L82}
K65 NAND_4 +CPU_$5xxx{K59} +CPU_$x2xx{J46} +CPU_$xx0x{K57} +CPU_$xxx3{J28} /CPU_$5203{K65}
L84 NOR_2 /Reg_Access{K74} +Reg_Write{L85}
L83 NAND_2 +CPU_$5203_Access{L84} /CPU_$5203_WR{L83}
K66 NAND_4 +CPU_$5xxx{K70} +CPU_$x2xx{J46} +CPU_$xx0x{K57} +CPU_$xxx4{J26} /CPU_$5204{K66}
L88 NOR_2 /Reg_Access{K74} +Reg_Read{K3}
L86 NAND_2 /CPU_$5204_RD{L86}
L87 NAND_2 +CPU_$5204_Access{L88} /CPU_$5204_WR{L87} +Reg_Write{L85}
K67 NAND_4 +CPU_$5xxx{K70} +CPU_$x2xx{J46} +CPU_$xx0x{K57} +CPU_$xxx5{J24} /CPU_$5205{K67}
L91 NOR_2 /Reg_Access{K74} +Reg_Read{K3}
L90 NAND_2 /CPU_$5205_RD{L90}
L89 NAND_2 +CPU_$5205_Access{L91} /CPU_$5205_WR{L89} +Reg_Write{L85}
K69 NAND_4 +CPU_$5xxx{K70} +CPU_$x2xx{J46} +CPU_$xx0x{K68} +CPU_$xxx6{J22} /CPU_$5206{K69}
L92 NOR_2 /Reg_Access{K74} +Reg_Read{K3}
L94 NAND_2 /CPU_$5206_RD{L94}
L93 NAND_2 +CPU_$5206_Access{L92} /CPU_$5206_WR{L93} +Reg_Write{L85}
K95 NAND_2 +CPU_$5xxx{K84} +CPU_$xCxx-xFxx{J44} /Reg_Access{K98}
L117 NOR_2 +CPU_ExRAM_Access{L117}
J4 NAND_7 +CPU_A1{H5} /CPU_A2{H8} +CPU_A3{H9} +CPU_A4{H11} +CPU_A5{H13} +CPU_A6{H15} +CPU_A7{H17}
J5 NAND_7 +CPU_A8{H19} +CPU_A9{H21} +CPU_A10{H23} +CPU_A11{H25} +CPU_A12{H27} +CPU_A13{H29} +CPU_A14{H31}
J6 NOR_2 +Reg_Access{H36}
J7 INVERT
J8 NOR_2 +Reg_Read{K3}
L21 NAND_2 +CPU_$FFFA/B_Access{J8} /CPU_$FFFA/B_RD{L21}

PPU Address Bus Buffering

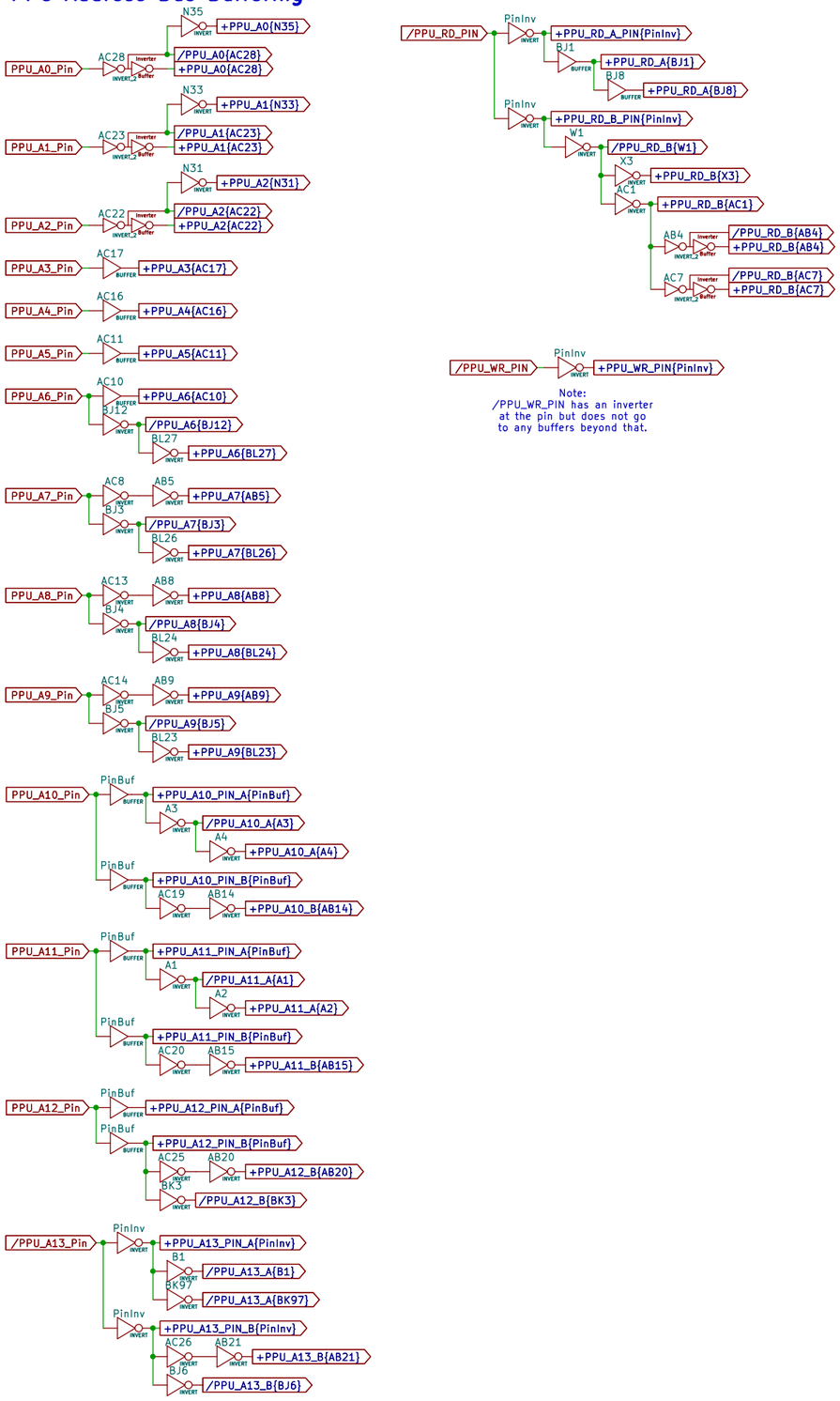

Note:
/PPU_WR_PIN has an inverter
at the pin but does not go
to any buffers beyond that.

$5105 Register Nametable Mapping

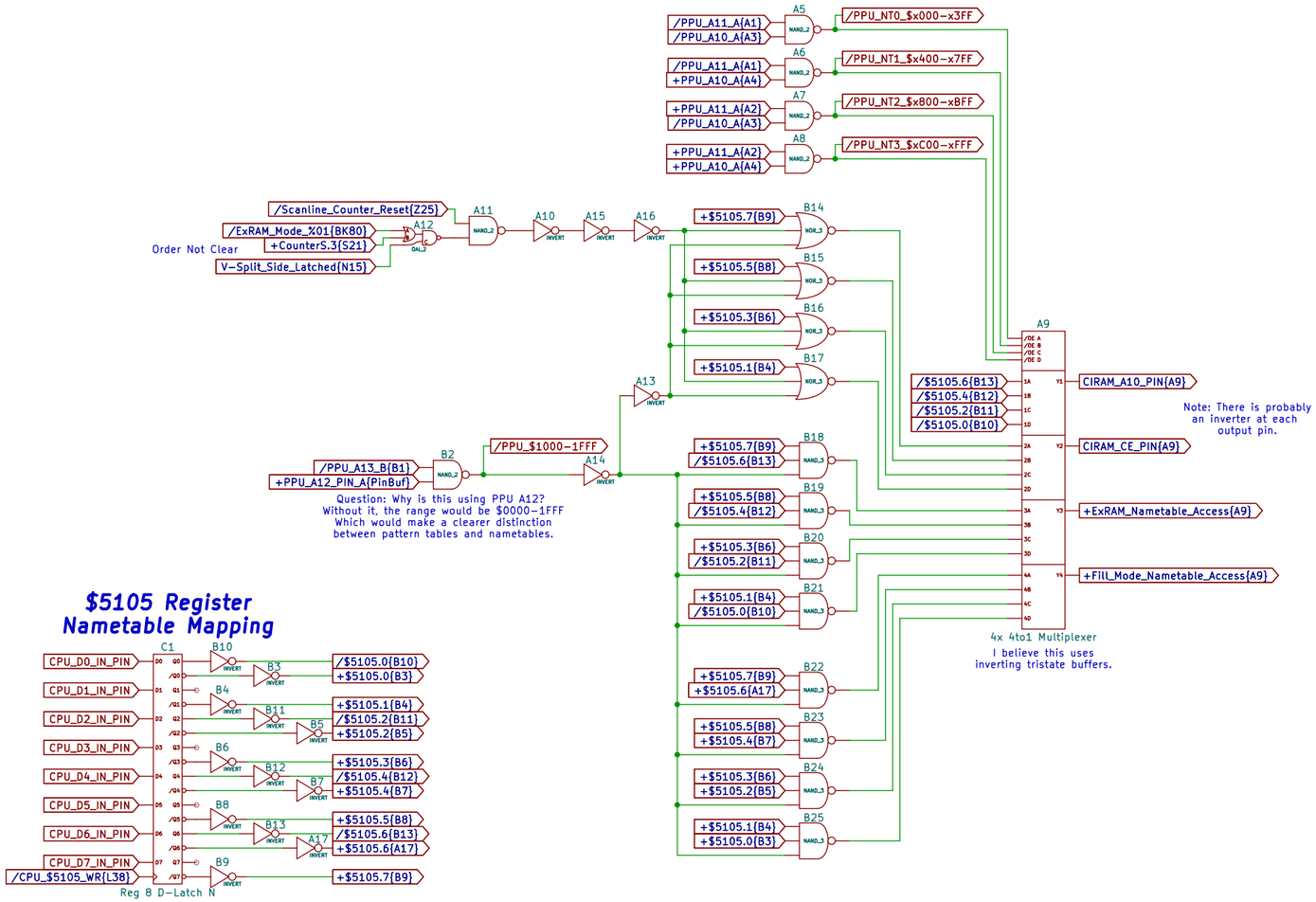

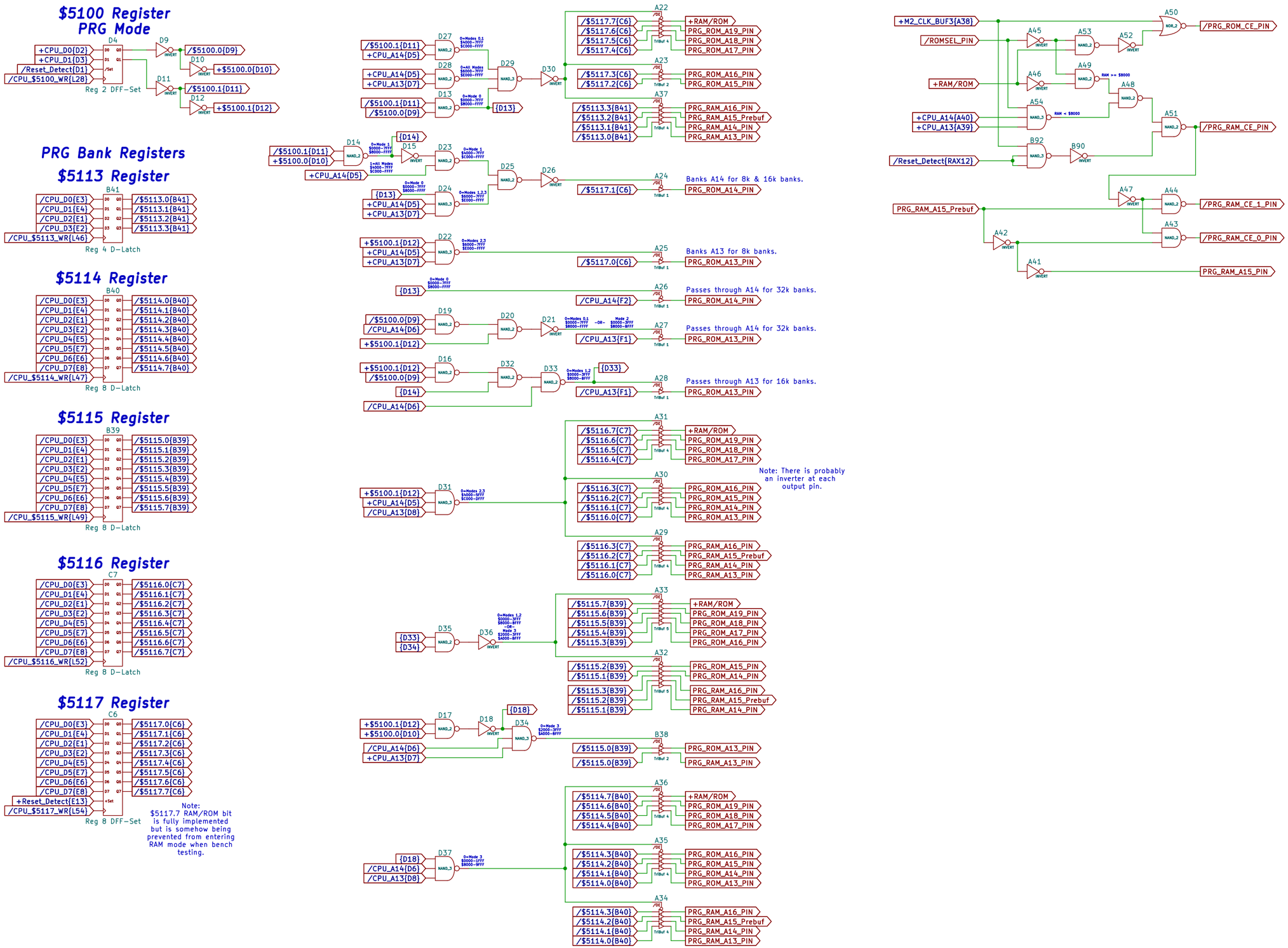
$5100 Register
PRG Mode
Reg 2 DFF-Set
PRG Bank Registers
$5113 Register
Reg 4 D-Latch
$5114 Register
Reg 8 D-Latch
$5115 Register
Reg 8 D-Latch
$5116 Register
Reg 8 D-Latch
$5117 Register
Reg 8 DFF-Set
Note: $5117.7 RAM/ROM bit is fully implemented but is somehow being prevented from entering RAM mode when bench testing.
Banks A14 for 8k & 16k banks.
Banks A13 for 8k banks.
Passes through A14 for 32k banks.
Passes through A14 for 32k banks.
Passes through A13 for 16k banks.
Note: There is probably an inverter at each output pin.

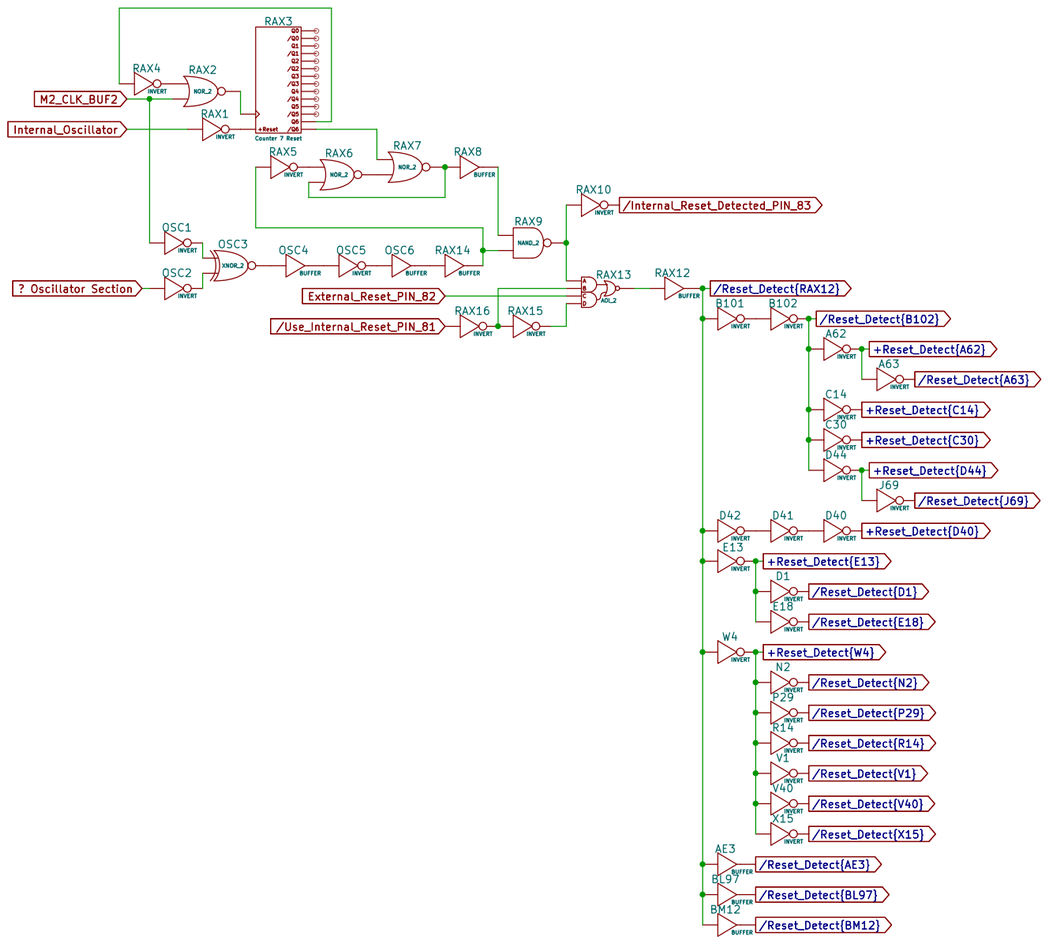
M2_CLK_BUF2
Internal_Oscillator
? Oscillator Section
RAX1
RAX2
RAX3
RAX4
RAX5
RAX6
RAX7
RAX8
RAX9
RAX10
RAX12
RAX13
RAX14
RAX15
RAX16
OSC1
OSC2
OSC3
OSC4
OSC5
OSC6
/Internal_Reset_Detected_PIN_83
External_Reset_PIN_82
/Use_Internal_Reset_PIN_81
/Reset_Detect{RAX12}
B101
B102
/Reset_Detect{B102}
A62
+Reset_Detect{A62}
A63
/Reset_Detect{A63}
C14
+Reset_Detect{C14}
C30
+Reset_Detect{C30}
D44
+Reset_Detect{D44}
J69
/Reset_Detect{J69}
D42
D41
D40
+Reset_Detect{D40}
E13
+Reset_Detect{E13}
D1
/Reset_Detect{D1}
E18
/Reset_Detect{E18}
W4
+Reset_Detect{W4}
N2
/Reset_Detect{N2}
P29
/Reset_Detect{P29}
R14
/Reset_Detect{R14}
V1
/Reset_Detect{V1}
V40
/Reset_Detect{V40}
X15
/Reset_Detect{X15}
AE3
/Reset_Detect{AE3}
BL97
/Reset_Detect{BL97}
BM12
/Reset_Detect{BM12}

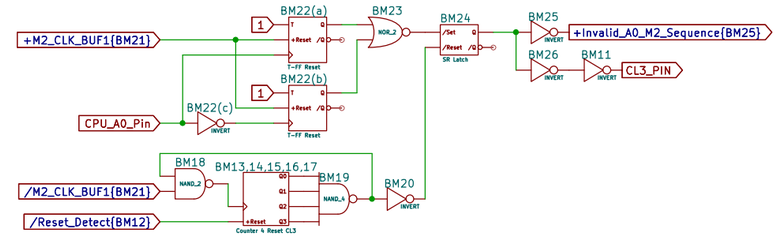
+M2_CLK_BUF1{BM21}
CPU_A0_Pin
/M2_CLK_BUF1{BM21}
/Reset_Detect{BM12}
BM22(a)
BM22(b)
BM22(c)
BM23
BM24
BM25
BM26
BM11
BM18
BM13,14,15,16,17
BM19
BM20
+Invalid_A0_M2_Sequence{BM25}
CL3_PIN

Incoming CPU Data Bus Buffering Bonanza

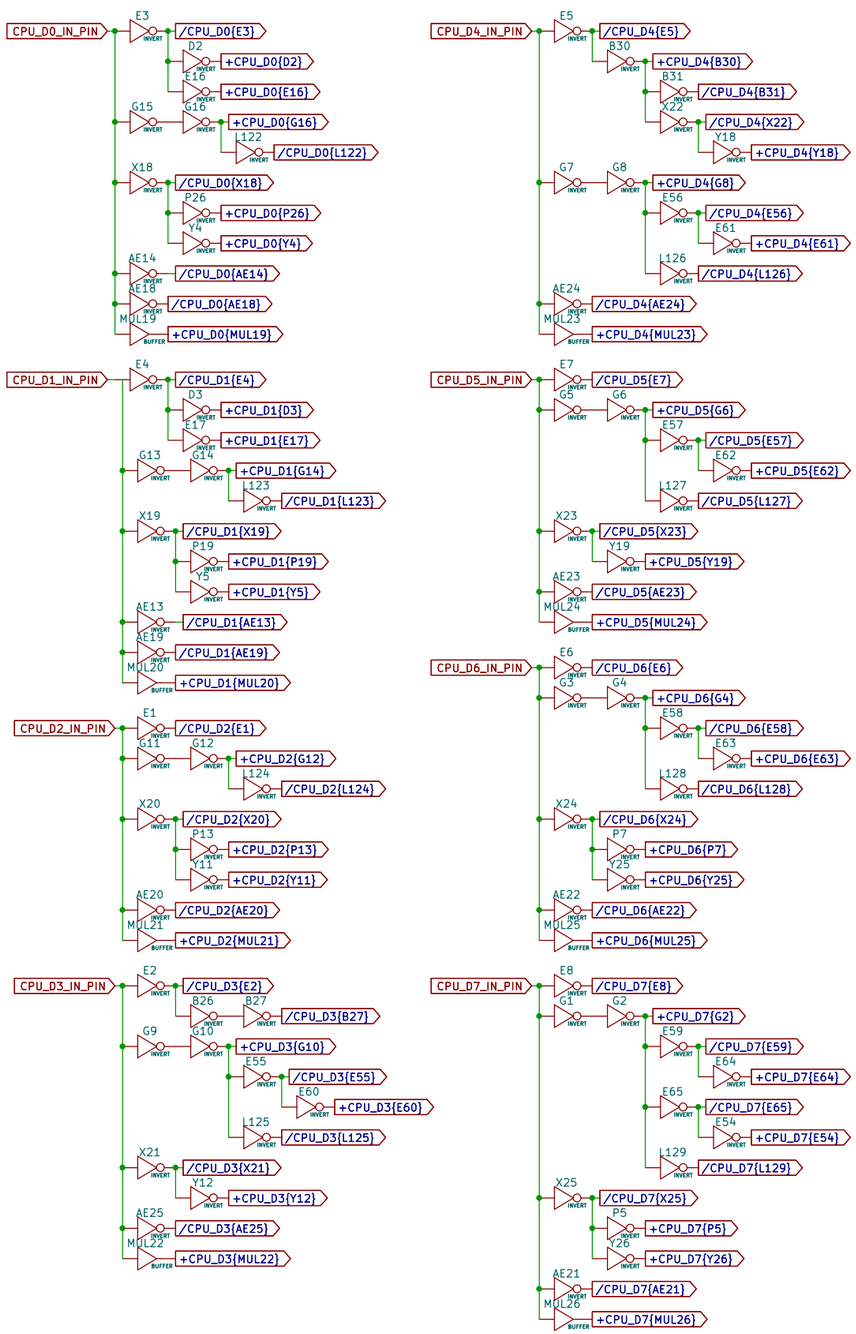

Multiplexing Data to be Driven onto the CPU Data Bus

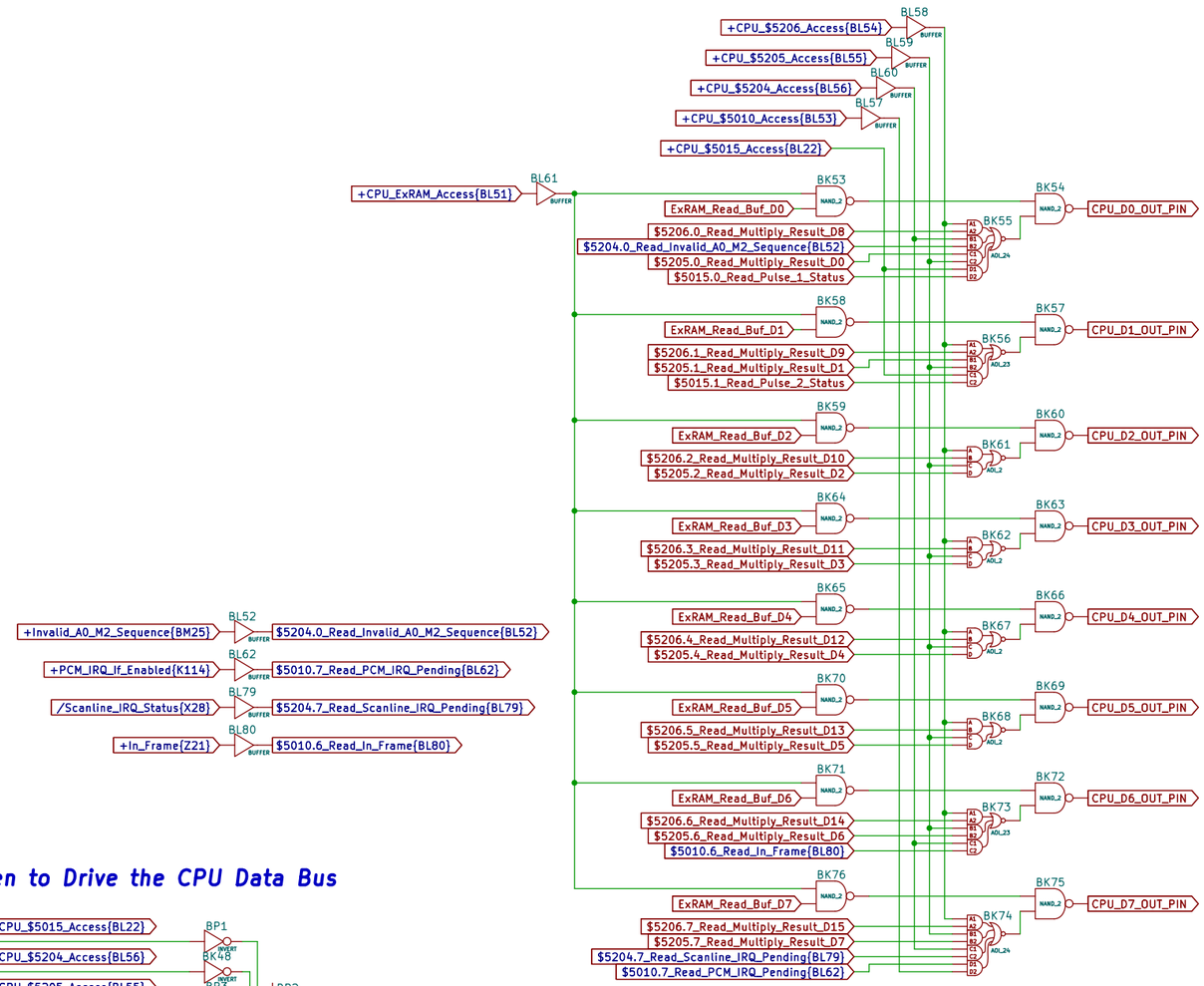

Decides When to Drive the CPU Data Bus

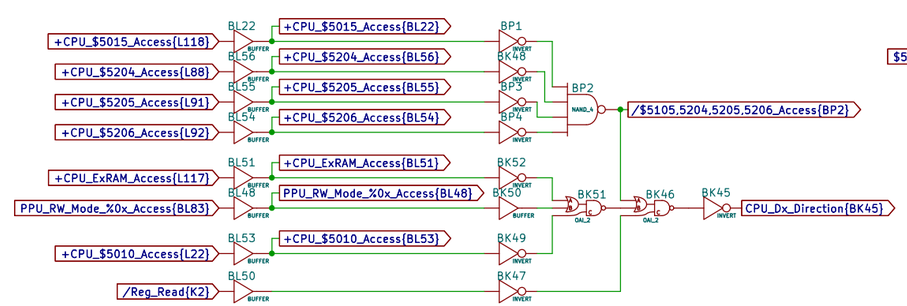

$5010 Register
Mode & IRQ Enable

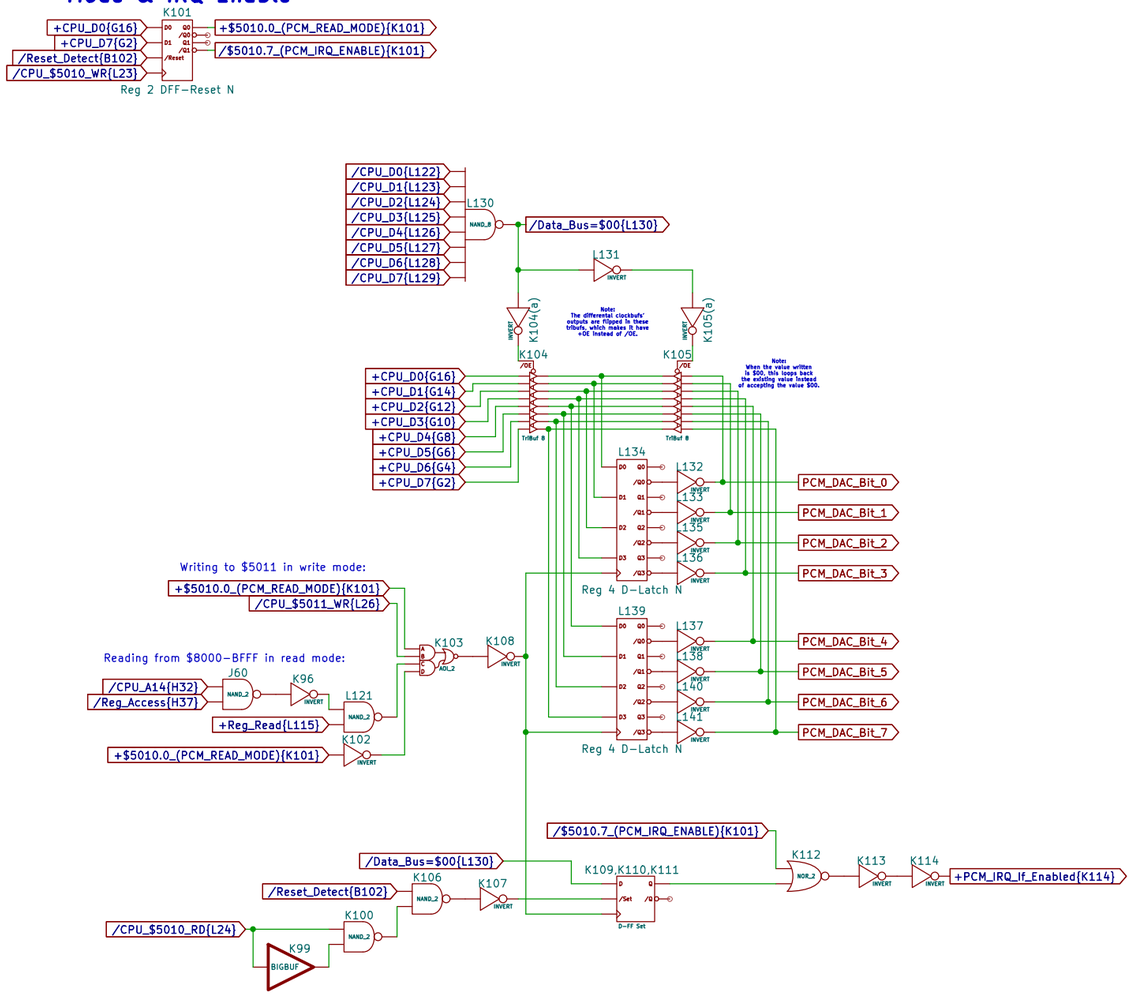

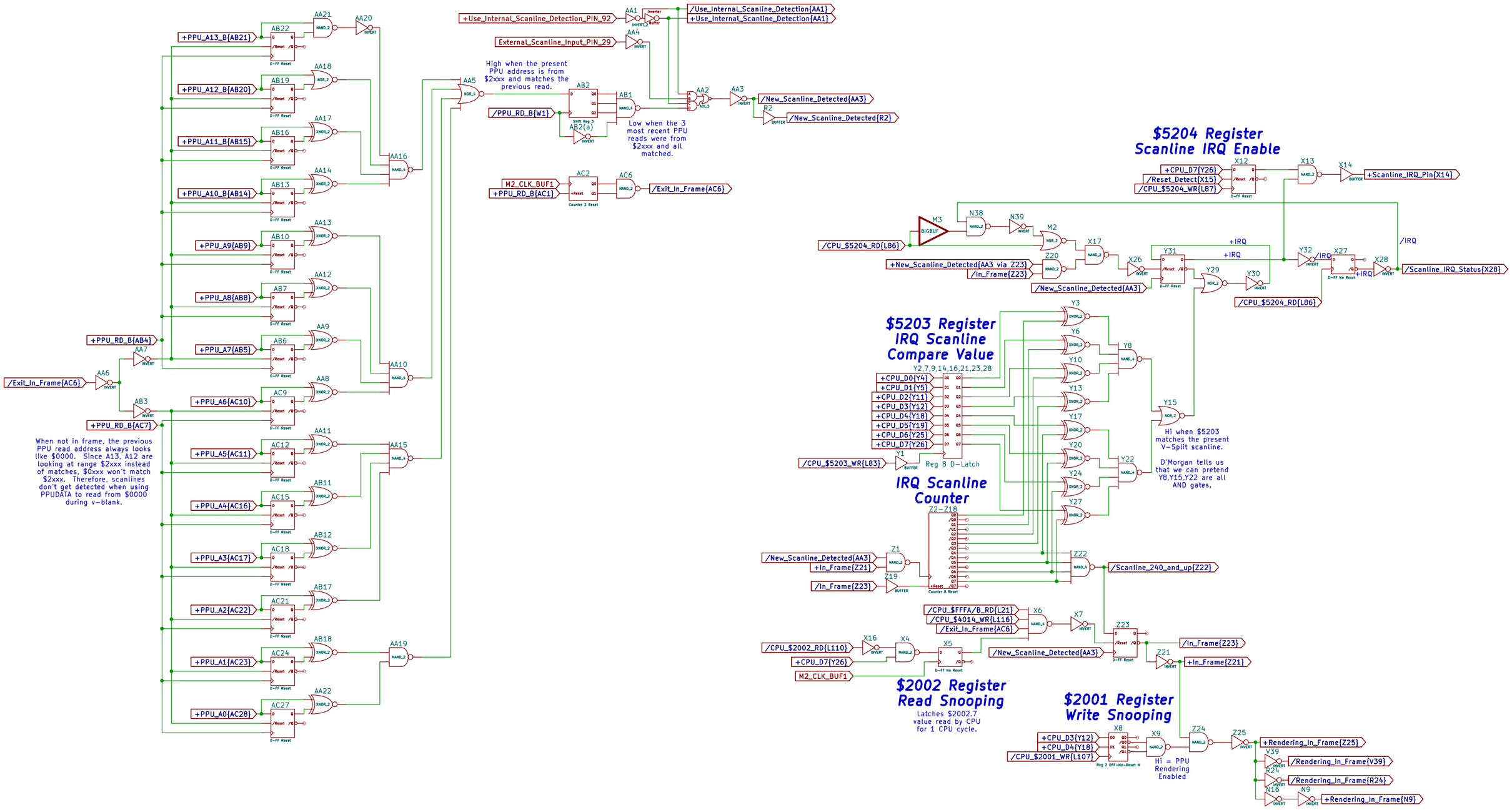
+PPU_A13_B{AB21}
+PPU_A12_B{AB20}
+PPU_A11_B{AB15}
+PPU_A10_B{AB14}
+PPU_A9{AB9}
+PPU_A8{AB8}
+PPU_A7{AB5}
+PPU_A6{AC10}
+PPU_A5{AC11}
+PPU_A4{AC16}
+PPU_A3{AC17}
+PPU_A2{AC22}
+PPU_A1{AC23}
+PPU_A0{AC28}
+PPU_RD_B{AB4}
+PPU_RD_B{AC7}
/Exit_In_Frame{AC6}
When not in frame, the previous PPU read address always looks like $0000. Since A13, A12 are looking at range $2xxx instead of matches, $0xxx won't match $2xxx. Therefore, scanlines don't get detected when using PPUDATA to read from $0000 during v-blank.
+Use_Internal_Scanline_Detection_PIN_92
External_Scanline_Input_PIN_29
/Use_Internal_Scanline_Detection{AA1}
+Use_Internal_Scanline_Detection{AA1}
/New_Scanline_Detected{AA3}
/New_Scanline_Detected{R2}
High when the present PPU address is from $2xxx and matches the previous read.
/PPU_RD_B{W1}
Low when the 3 most recent PPU reads were from $2xxx and all matched.
M2_CLK_BUF1
+PPU_RD_B{AC1}
/Exit_In_Frame{AC6}
$5204 Register
Scanline IRQ Enable
+CPU_D7{Y26}
/Reset_Detect{X15}
/CPU_$5204_WR{L87}
+Scanline_IRQ_Pin{X14}
/CPU_$5204_RD{L86}
+New_Scanline_Detected{AA3 via Z23}
/In_Frame{Z23}
/New_Scanline_Detected{AA3}
+IRQ
/IRQ
/Scanline_IRQ_Status{X28}
$5203 Register
IRQ Scanline
Compare Value
Y2,7,9,14,16,21,23,28
+CPU_D0{Y4}
+CPU_D1{Y5}
+CPU_D2{Y11}
+CPU_D3{Y12}
+CPU_D4{Y18}
+CPU_D5{Y19}
+CPU_D6{Y25}
+CPU_D7{Y26}
/CPU_$5203_WR{L83}
Reg 8 D-Latch
Hi when $5203 matches the present V-Split scanline.
D'Morgan tells us that we can pretend Y8,Y15,Y22 are all AND gates.
IRQ Scanline
Counter
Z2-Z18
/New_Scanline_Detected{AA3}
+In_Frame{Z21}
/In_Frame{Z23}
/Scanline_240_and_up{Z22}
/CPU_$FFFA/B_RD{L21}
/CPU_$4014_WR{L116}
/Exit_In_Frame{AC6}
/CPU_$2002_RD{L110}
+CPU_D7{Y26}
M2_CLK_BUF1
/New_Scanline_Detected{AA3}
/In_Frame{Z23}
+In_Frame{Z21}
$2002 Register
Read Snooping
Latches $2002.7 value read by CPU for 1 CPU cycle.
$2001 Register
Write Snooping
+CPU_D3{Y12}
+CPU_D4{Y18}
/CPU_$2001_WR{L107}
Hi = PPU Rendering Enabled
+Rendering_In_Frame{Z25}
/Rendering_In_Frame{V39}
/Rendering_In_Frame{R24}
+Rendering_In_Frame{N9}

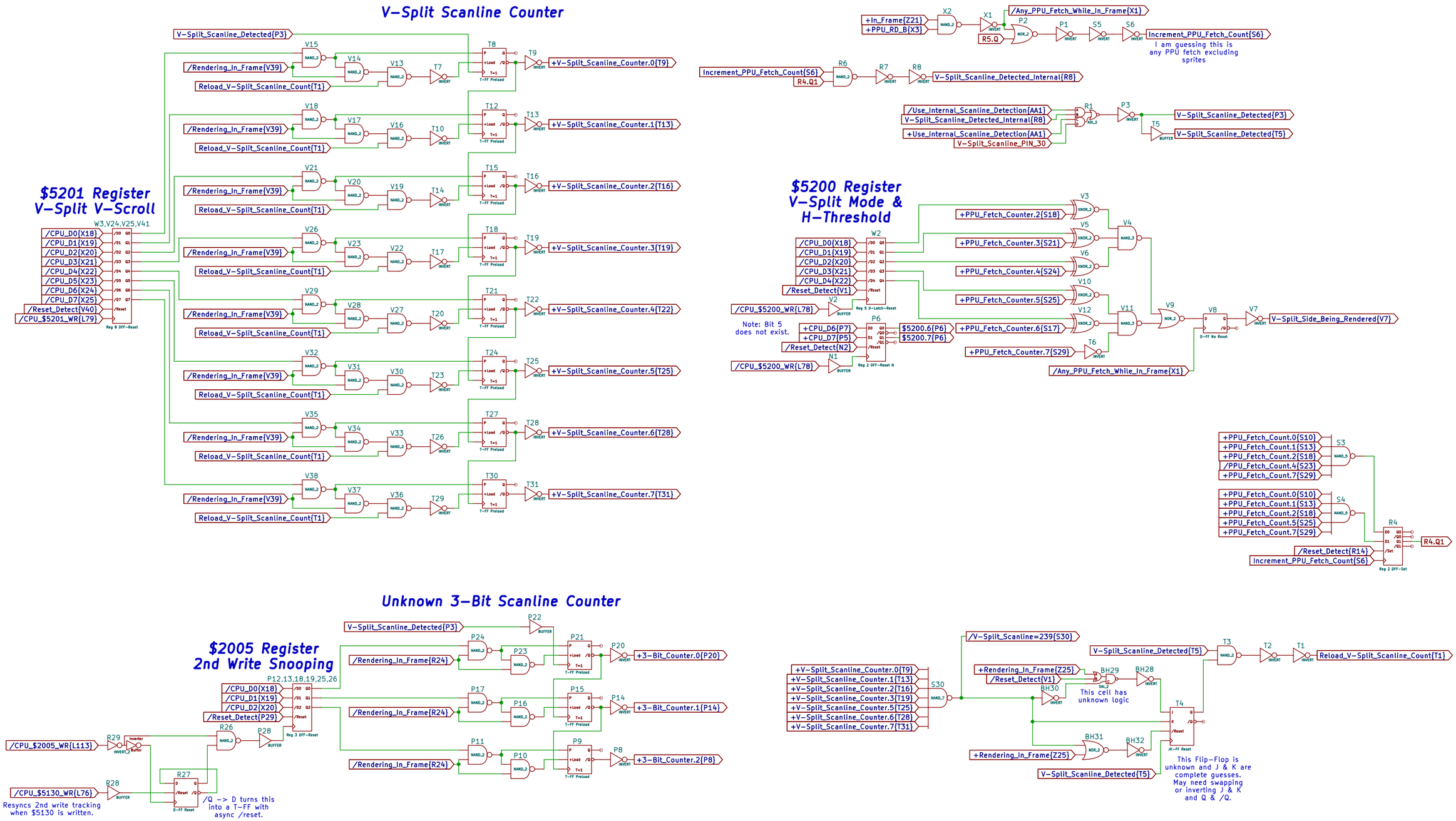
V-Split Scanline Counter
$5201 Register
V-Split V-Scroll
W3,V24,V25,V41
/CPU_D0{X18}
/CPU_D1{X19}
/CPU_D2{X20}
/CPU_D3{X21}
/CPU_D4{X22}
/CPU_D5{X23}
/CPU_D6{X24}
/CPU_D7{X25}
/Reset_Detect{V40}
/CPU_$5201_WR{L79}
Reg 8 DFF-Reset
V-Split_Scanline_Detected{P3}
/Rendering_In_Frame{V39}
Reload_V-Split_Scanline_Count{T1}
+V-Split_Scanline_Counter.0{T9}
+V-Split_Scanline_Counter.1{T13}
+V-Split_Scanline_Counter.2{T16}
+V-Split_Scanline_Counter.3{T19}
+V-Split_Scanline_Counter.4{T22}
+V-Split_Scanline_Counter.5{T25}
+V-Split_Scanline_Counter.6{T28}
+V-Split_Scanline_Counter.7{T31}
+In_Frame{Z21}
+PPU_RD_B{X3}
R5.Q
/Any_PPU_Fetch_While_In_Frame{X1}
Increment_PPU_Fetch_Count{S6}
I am guessing this is any PPU fetch excluding sprites
Increment_PPU_Fetch_Count{S6}
R4.Q1
V-Split_Scanline_Detected_Internal{R8}
/Use_Internal_Scanline_Detection{AA1}
V-Split_Scanline_Detected_Internal{R8}
+Use_Internal_Scanline_Detection{AA1}
V-Split_Scanline_PIN_30
V-Split_Scanline_Detected{P3}
V-Split_Scanline_Detected{T5}
$5200 Register
V-Split Mode &
H-Threshold
/CPU_D0{X18}
/CPU_D1{X19}
/CPU_D2{X20}
/CPU_D3{X21}
/CPU_D4{X22}
/Reset_Detect{V1}
/CPU_$5200_WR{L78}
Reg 5 D-Latch-Reset
Note: Bit 5 does not exist.
+CPU_D6{P7}
+CPU_D7{P5}
/Reset_Detect{N2}
$5200.6{P6}
$5200.7{P6}
Reg 2 DFF-Reset N
+PPU_Fetch_Counter.2{S18}
+PPU_Fetch_Counter.3{S21}
+PPU_Fetch_Counter.4{S24}
+PPU_Fetch_Counter.5{S25}
+PPU_Fetch_Counter.6{S17}
+PPU_Fetch_Counter.7{S29}
/Any_PPU_Fetch_While_In_Frame{X1}
V-Split_Side_Being_Rendered{V7}
D-FF No Reset
+PPU_Fetch_Count.0{S10}
+PPU_Fetch_Count.1{S13}
+PPU_Fetch_Count.2{S18}
/PPU_Fetch_Count.4{S23}
+PPU_Fetch_Count.7{S29}
+PPU_Fetch_Count.0{S10}
+PPU_Fetch_Count.1{S13}
+PPU_Fetch_Count.2{S18}
+PPU_Fetch_Count.5{S25}
+PPU_Fetch_Count.7{S29}
/Reset_Detect{R14}
Increment_PPU_Fetch_Count{S6}
R4.Q1
Reg 2 DFF-Set
Unknown 3-Bit Scanline Counter
$2005 Register
2nd Write Snooping
P12,13,18,19,25,26
/CPU_D0{X18}
/CPU_D1{X19}
/CPU_D2{X20}
/Reset_Detect{P29}
Reg 3 DFF-Reset
/CPU_$2005_WR{L113}
/CPU_$5130_WR{L76}
Resyncs 2nd write tracking when $5130 is written.
/Q -> D turns this into a T-FF with async /reset.
+3-Bit_Counter.0{P20}
+3-Bit_Counter.1{P14}
+3-Bit_Counter.2{P8}
/V-Split_Scanline=239{S30}
+Rendering_In_Frame{Z25}
/Reset_Detect{V1}
This cell has unknown logic
V-Split_Scanline_Detected{T5}
Reload_V-Split_Scanline_Count{T1}
This Flip-Flop is unknown and J & K are complete guesses. May need swapping or inverting J & K and Q & /Q.

PPU Fetch Counter

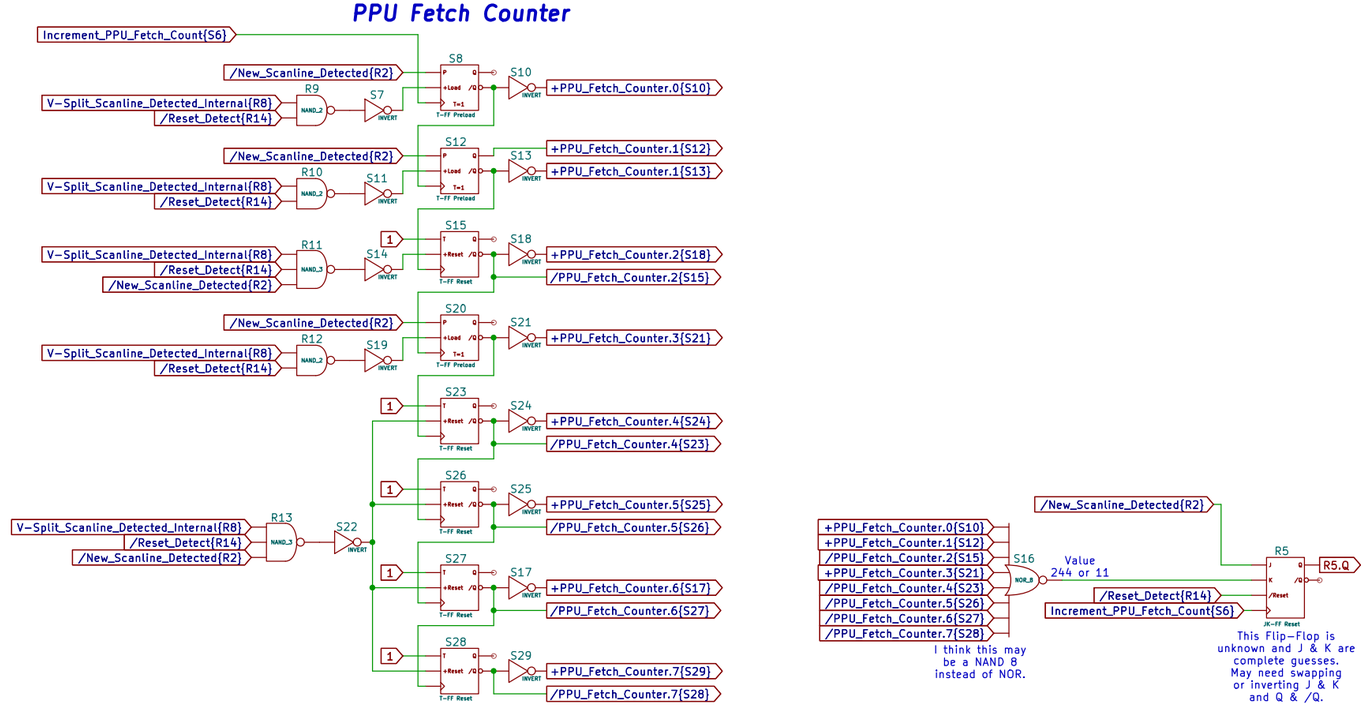

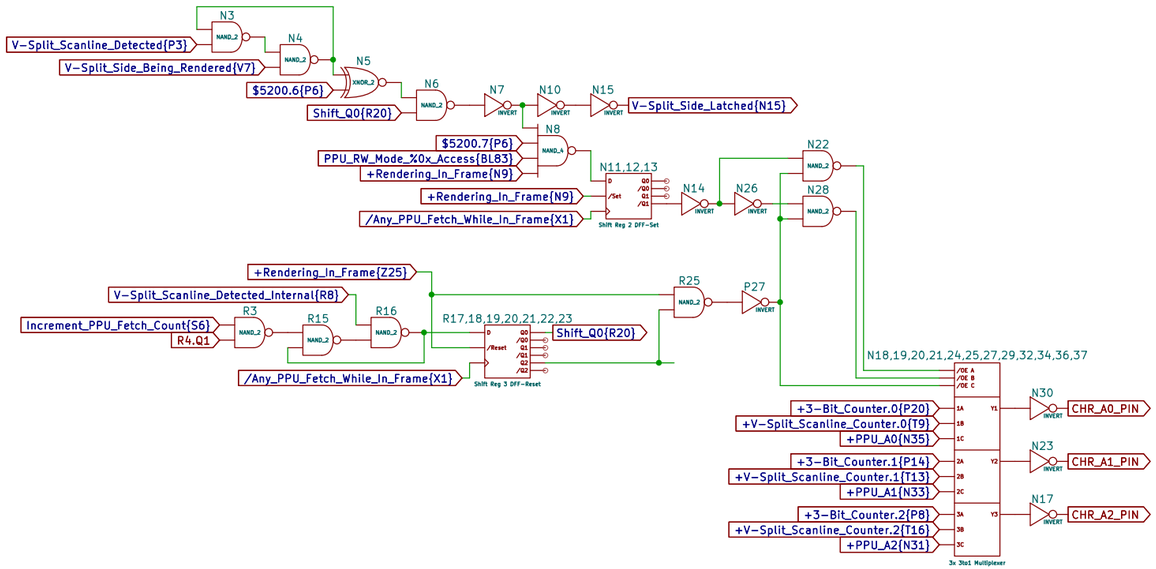
N3
NAND_2
V-Split_Scanline_Detected{P3}
N4
NAND_2
V-Split_Side_Being_Rendered{V7}
N5
XNOR_2
$5200.6{P6}
N6
NAND_2
Shift_Q0{R20}
N7
INVERT
N10
INVERT
N15
INVERT
V-Split_Side_Latched{N15}
N8
NAND_4
$5200.7{P6}
PPU_RW_Mode_%0x_Access{BL83}
+Rendering_In_Frame{N9}
N11,12,13
D
/Set
Q0
/Q0
Q1
/Q1
Shift Reg 2 DFF-Set
+Rendering_In_Frame{N9}
/Any_PPU_Fetch_While_In_Frame{X1}
N14
INVERT
N26
INVERT
N22
NAND_2
N28
NAND_2
+Rendering_In_Frame{Z25}
V-Split_Scanline_Detected_Internal{R8}
Increment_PPU_Fetch_Count{S6}
R4.Q1
R3
NAND_2
R15
NAND_2
R16
NAND_2
/Any_PPU_Fetch_While_In_Frame{X1}
R17,18,19,20,21,22,23
D
/Reset
Q0
/Q0
Q1
/Q1
Q2
/Q2
Shift Reg 3 DFF-Reset
Shift_Q0{R20}
R25
NAND_2
P27
INVERT
N18,19,20,21,24,25,27,29,32,34,36,37
/OE A
/OE B
/OE C
+3-Bit_Counter.0{P20}
+V-Split_Scanline_Counter.0{T9}
+PPU_A0{N35}
+3-Bit_Counter.1{P14}
+V-Split_Scanline_Counter.1{T13}
+PPU_A1{N33}
+3-Bit_Counter.2{P8}
+V-Split_Scanline_Counter.2{T16}
+PPU_A2{N31}
1A
1B
1C
2A
2B
2C
3A
3B
3C
Y1
Y2
Y3
3x 3to1 Multiplexer
N30
INVERT
CHR_A0_PIN
N23
INVERT
CHR_A1_PIN
N17
INVERT
CHR_A2_PIN

$5104 Register
ExRAM Mode

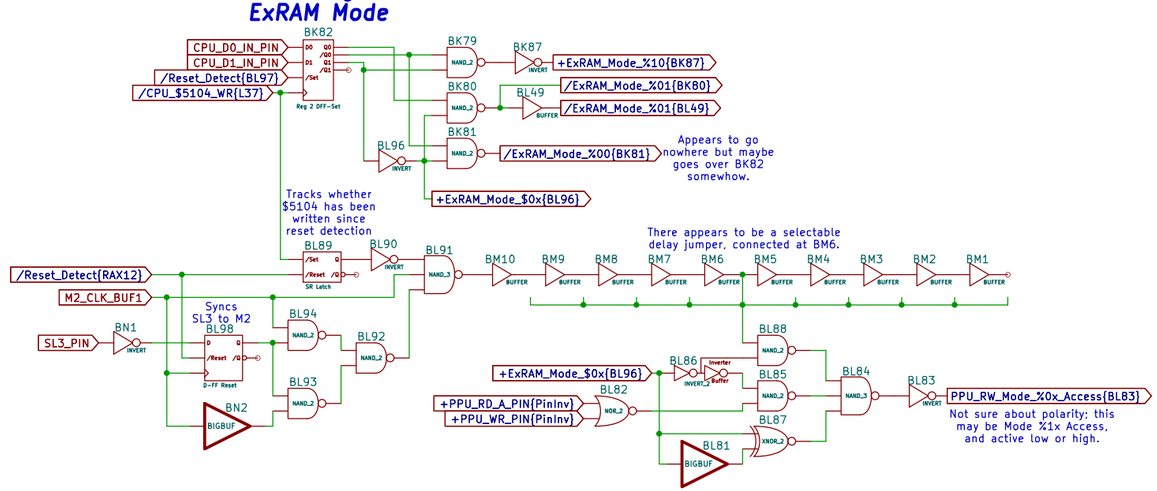

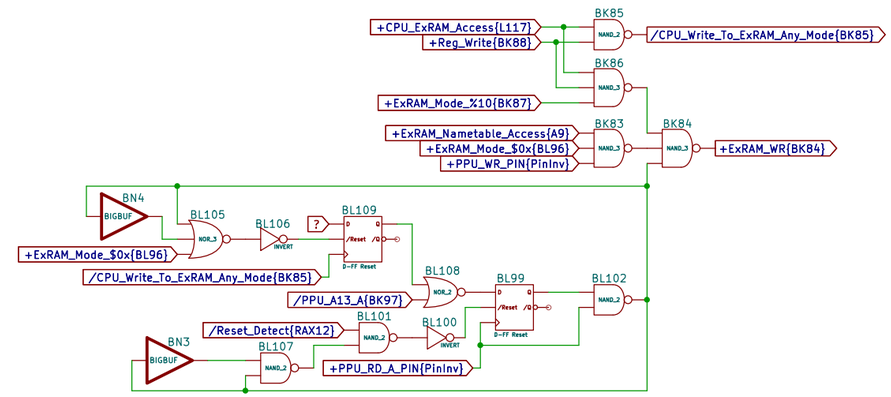

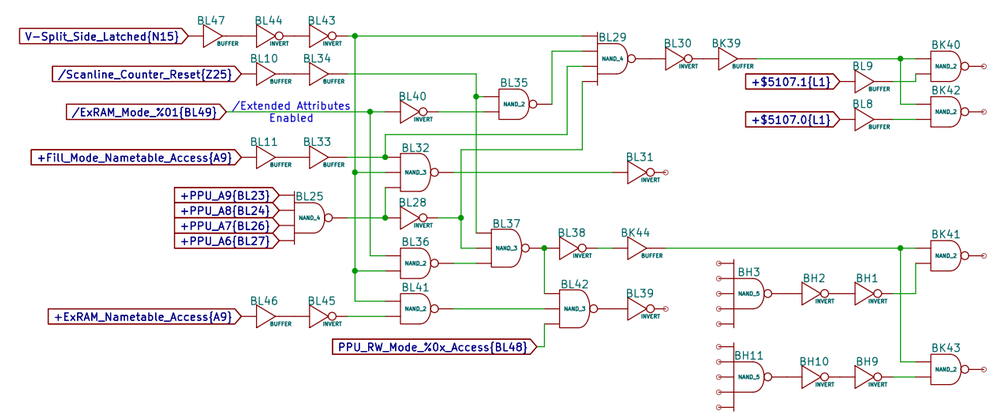

$5107 Register
Fill-Mode Color

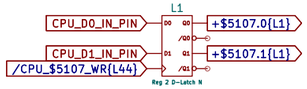

$5106 Register
Fill-Mode Tile

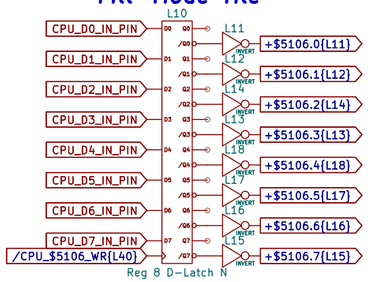

5-Bit to 7-Bit Pulse Length Lookup Table

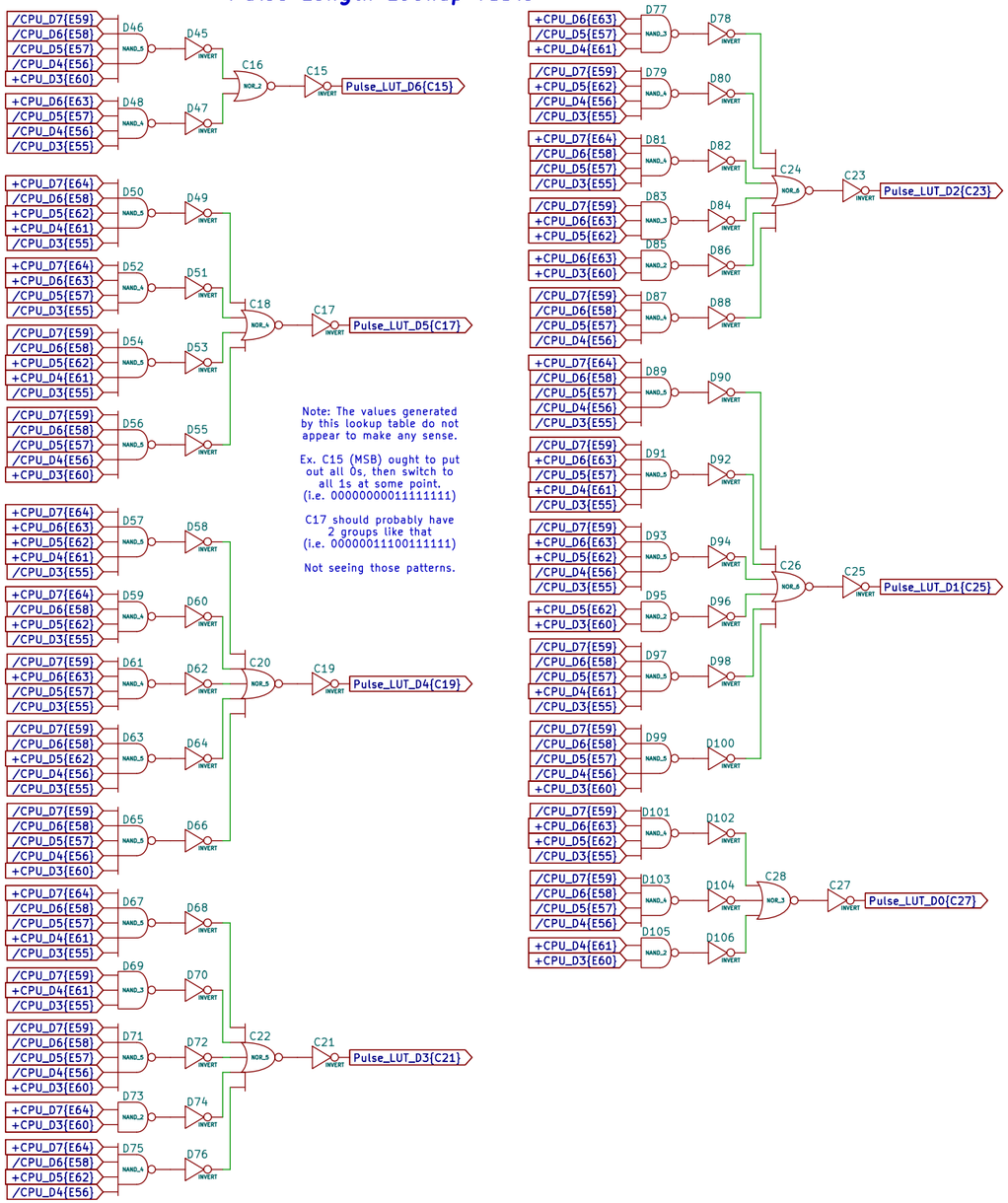

$5003 Register Pulse 1 Length Counter

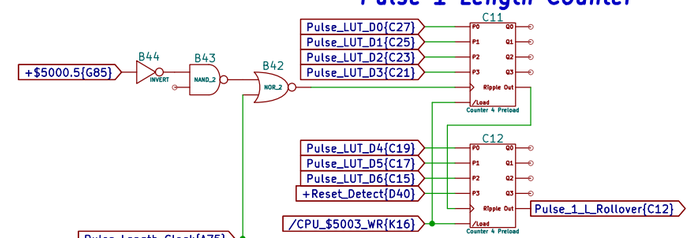

$5007 Register Pulse 2 Length Counter

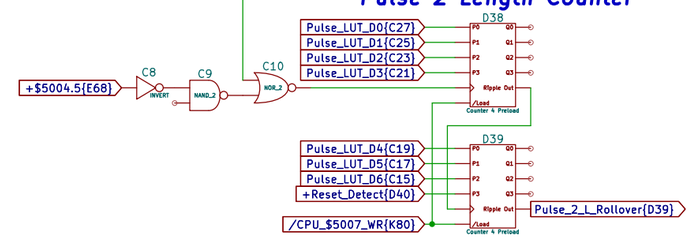

Pulse Channel Clock Source

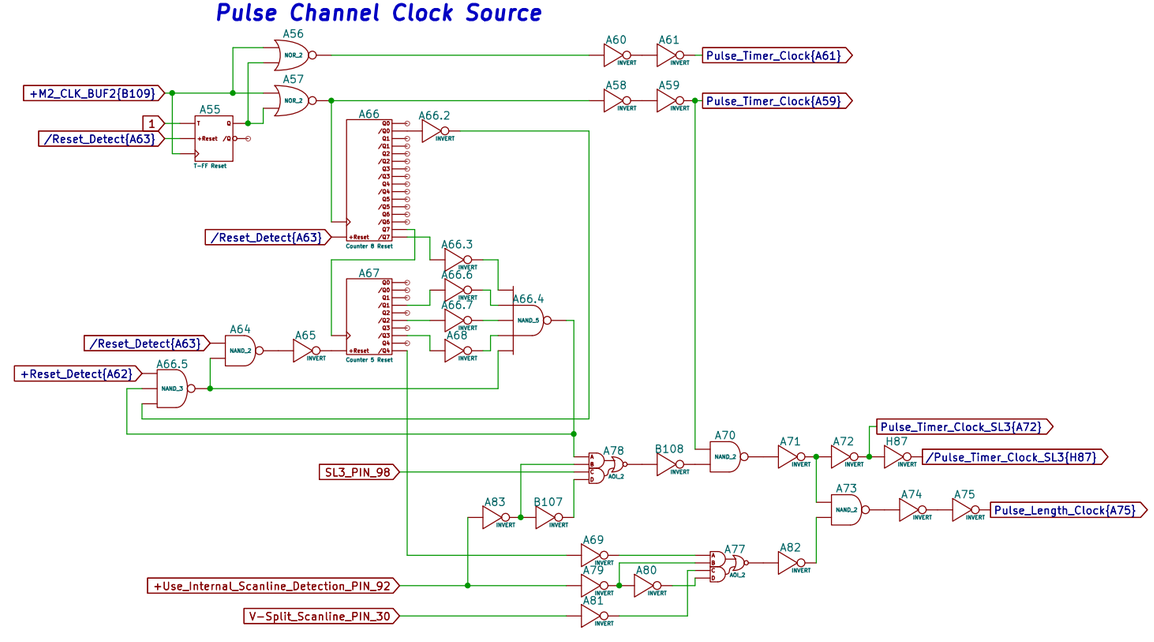

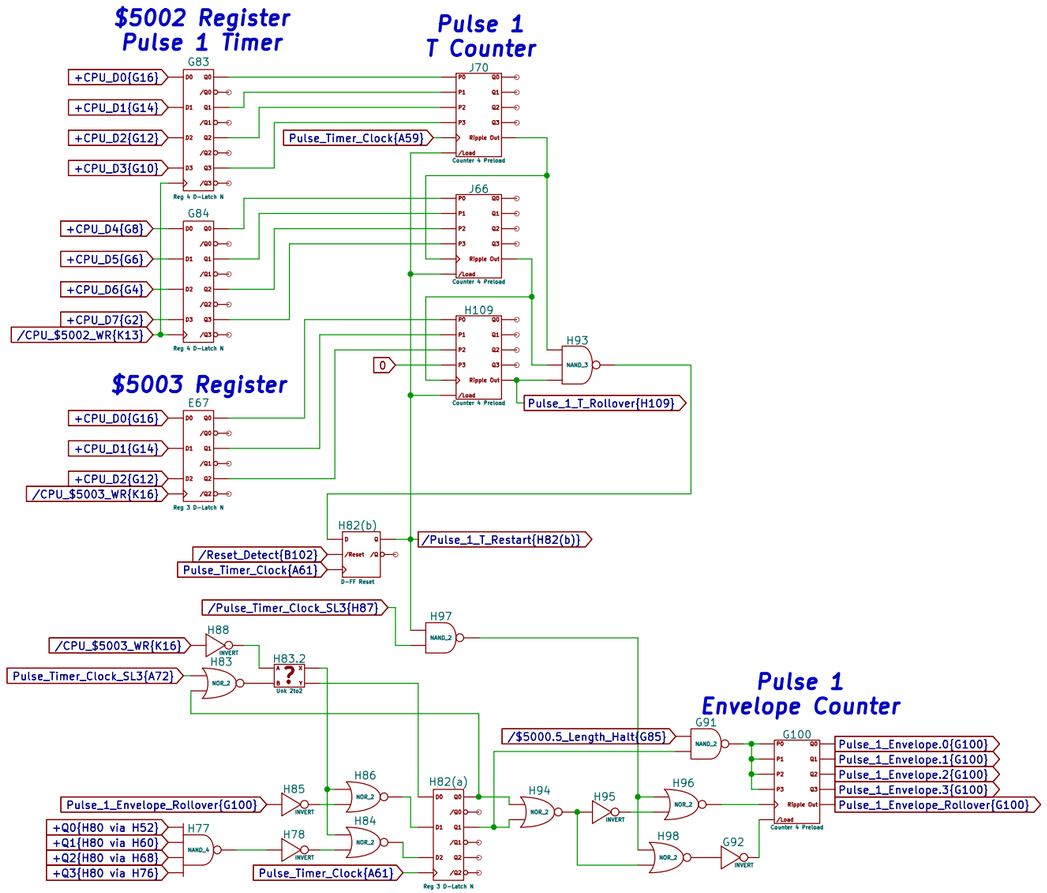
$5002 Register
Pulse 1 Timer
Pulse 1
T Counter
G83
J70
+CPU_D0{G16}
+CPU_D1{G14}
+CPU_D2{G12}
+CPU_D3{G10}
Pulse_Timer_Clock{A59}
G84
J66
+CPU_D4{G8}
+CPU_D5{G6}
+CPU_D6{G4}
+CPU_D7{G2}
/CPU_$5002_WR{K13}
H109
H93
0
Pulse_1_T_Rollover{H109}
$5003 Register
E67
+CPU_D0{G16}
+CPU_D1{G14}
+CPU_D2{G12}
/CPU_$5003_WR{K16}
H82(b)
/Reset_Detect{B102}
Pulse_Timer_Clock{A61}
/Pulse_1_T_Restart{H82(b)}
/Pulse_Timer_Clock_SL3{H87}
H97
H88
/CPU_$5003_WR{K16}
H83
H83.2
Pulse_Timer_Clock_SL3{A72}
Pulse 1
Envelope Counter
/$5000.5_Length_Halt{G85}
G91
G100
Pulse_1_Envelope.0{G100}
Pulse_1_Envelope.1{G100}
Pulse_1_Envelope.2{G100}
Pulse_1_Envelope.3{G100}
Pulse_1_Envelope_Rollover{G100}
H85
H86
H82(a)
H94
H95
H96
Pulse_1_Envelope_Rollover{G100}
+Q0{H80 via H52}
+Q1{H80 via H60}
+Q2{H80 via H68}
+Q3{H80 via H76}
H77
H78
H84
H98
G92
Pulse_Timer_Clock{A61}

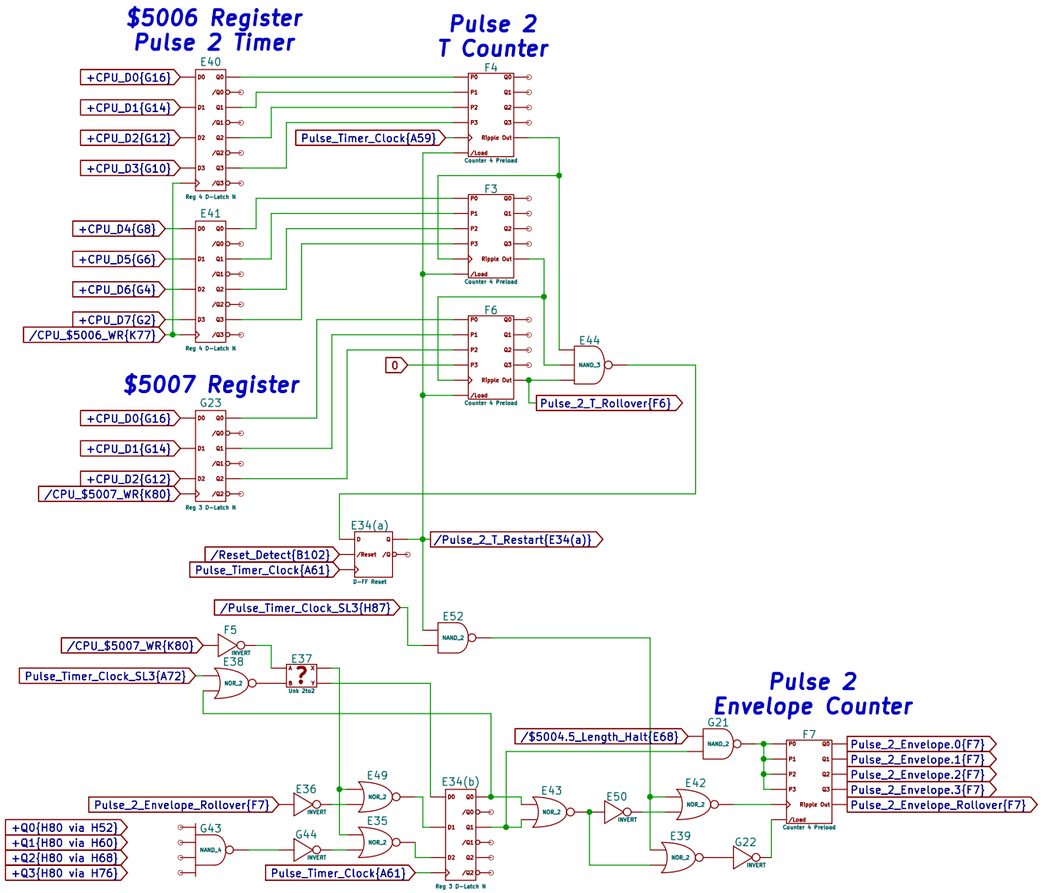
$5006 Register
Pulse 2 Timer
Pulse 2
T Counter
E40
F4
+CPU_D0{G16}
+CPU_D1{G14}
+CPU_D2{G12}
+CPU_D3{G10}
Pulse_Timer_Clock{A59}
E41
F3
+CPU_D4{G8}
+CPU_D5{G6}
+CPU_D6{G4}
+CPU_D7{G2}
/CPU_$5006_WR{K77}
F6
E44
0
Pulse_2_T_Rollover{F6}
$5007 Register
G23
+CPU_D0{G16}
+CPU_D1{G14}
+CPU_D2{G12}
/CPU_$5007_WR{K80}
E34(a)
/Reset_Detect{B102}
Pulse_Timer_Clock{A61}
/Pulse_2_T_Restart{E34(a)}
/Pulse_Timer_Clock_SL3{H87}
E52
F5
/CPU_$5007_WR{K80}
E38
E37
Pulse_Timer_Clock_SL3{A72}
Pulse 2
Envelope Counter
/$5004.5_Length_Halt{E68}
G21
F7
Pulse_2_Envelope.0{F7}
Pulse_2_Envelope.1{F7}
Pulse_2_Envelope.2{F7}
Pulse_2_Envelope.3{F7}
Pulse_2_Envelope_Rollover{F7}
E36
E49
E34(b)
E43
E50
E42
Pulse_2_Envelope_Rollover{F7}
+Q0{H80 via H52}
+Q1{H80 via H60}
+Q2{H80 via H68}
+Q3{H80 via H76}
G43
G44
E35
E39
G22
Pulse_Timer_Clock{A61}

$5000 Register
Pulse 1 Duty Envelope Volume

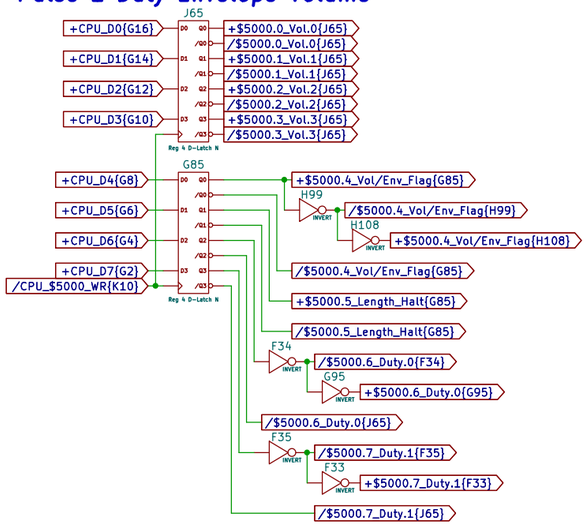

Pulse 1
Duty Cycle Counter

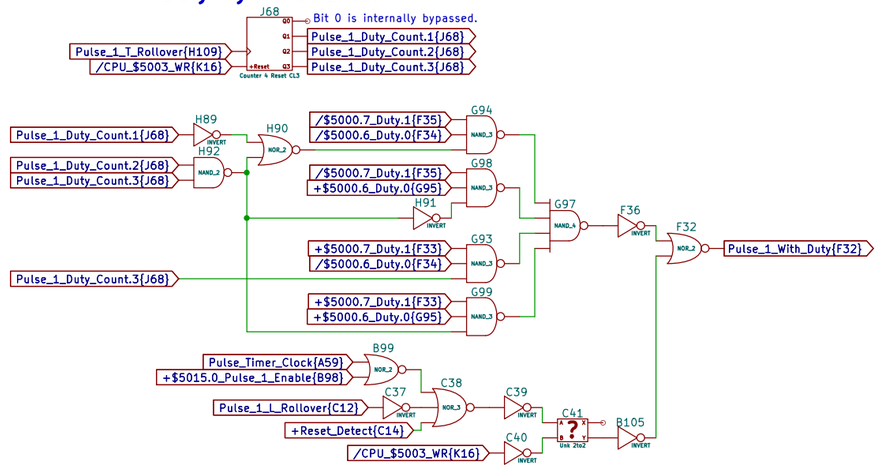

Pulse 1
Envelope/Volume Multiplexing

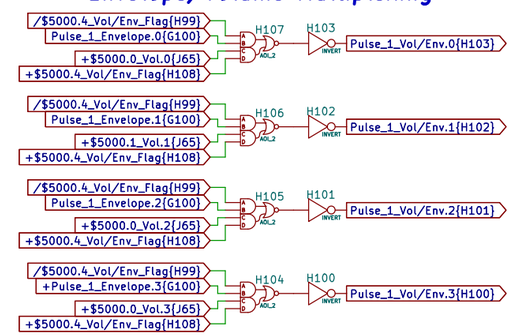

$5004 Register
Pulse 2 Duty Envelope Volume

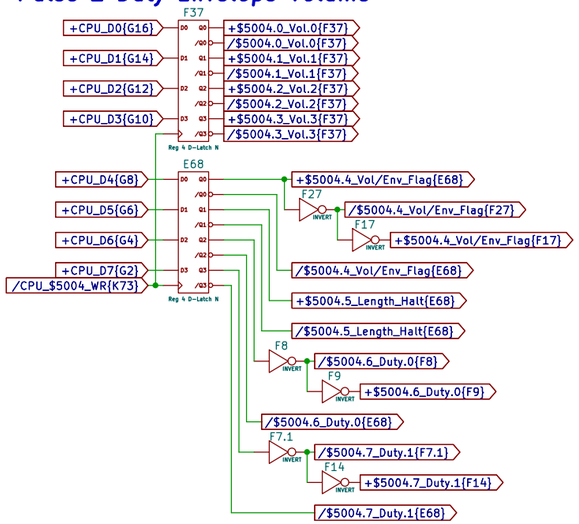

Pulse 2
Duty Cycle Counter

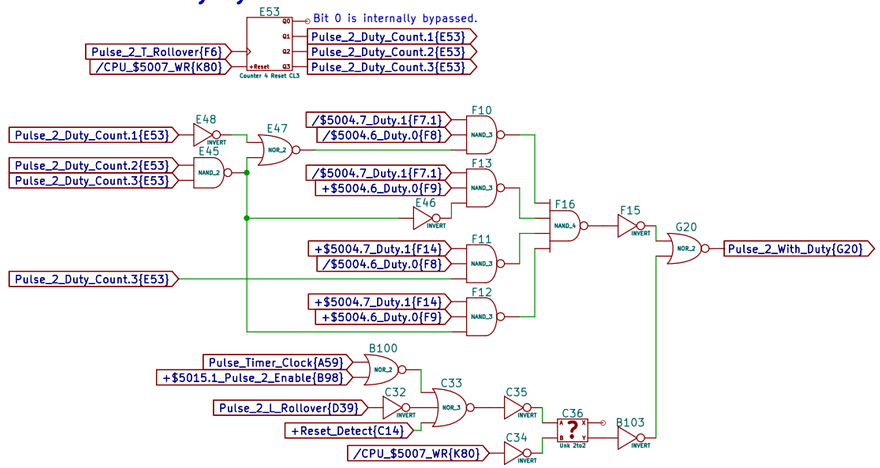

Pulse 2
Envelope/Volume Multiplexing

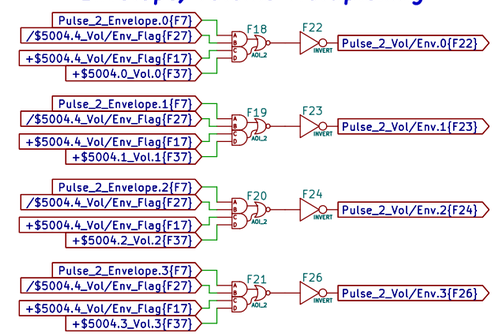

$5015 Write Register
Pulse 1&2 Status

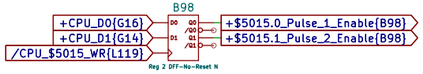

Pulse 1&2
Individual 4-bit DAC Outputs

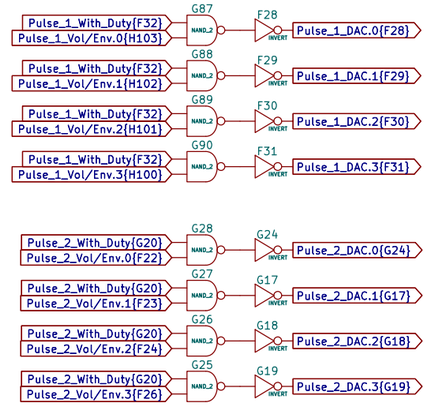

Components for
4-bit Adder

Note: The adder's logic is verified correct in Pulse DAC Adder Logic.xlsx

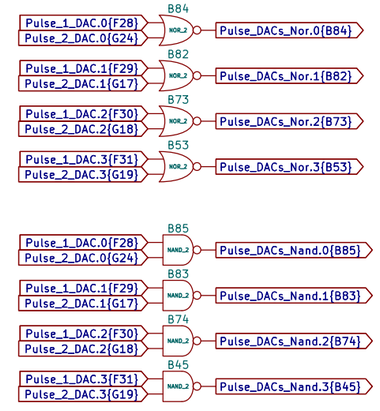

4-bit Adder
Adding Pulse 1&2 DACs

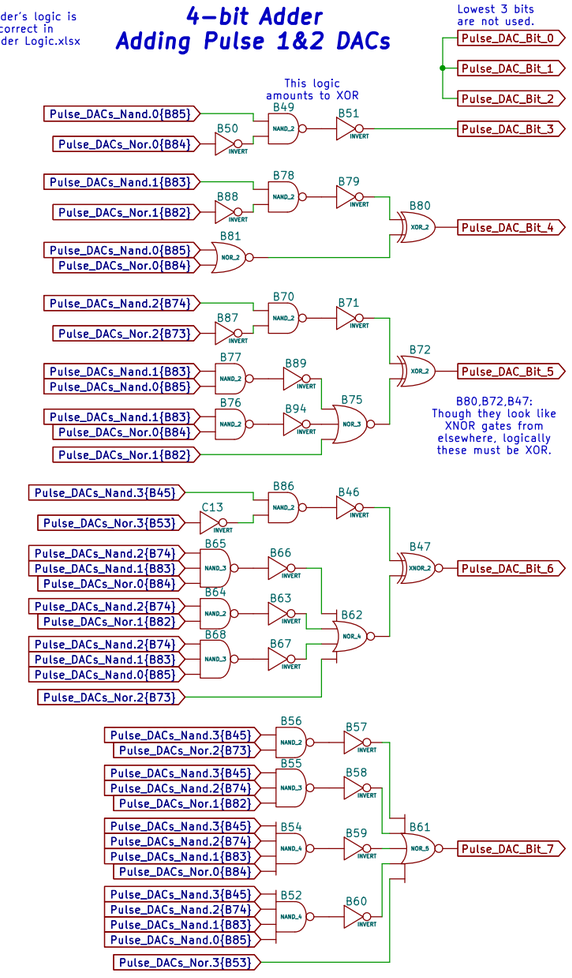

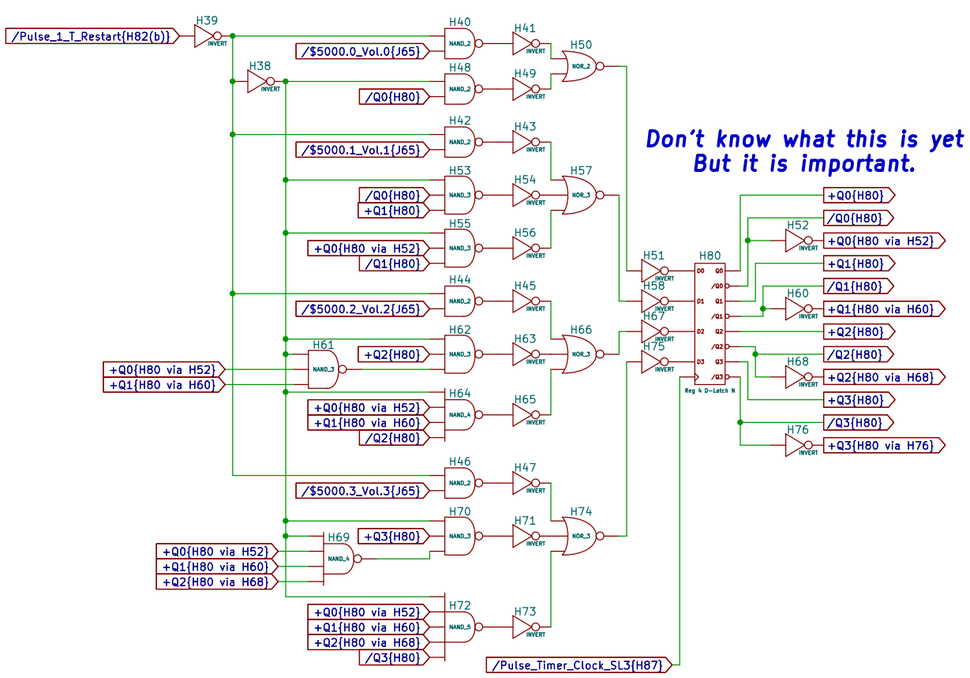

Don't know what this is yet
But it is important.